TYPICAL SECTION PACKAGE

FOR

State Road 400
I-4 Beyond the Ultimate Project

From West of US 27/SR 25 to West of SR 535 (Kirkman Road) and from 1 Mile East of SR 434 to ½ Mile East of SR 472 (Polk, Osceola, Orange, Seminole & Volusia Counties)

PD&E Financial Project ID 201210-2-22-01 (District 1)
PD&E Financial Project ID 432100-1-22-01 (District 5)

Design Financial Project ID 201210-3 (Polk County) (Segment 5)
Design Financial Project ID 431456-1 (Osceola County) (Segment 1A)
Design Financial Project ID 242484-8 (Orange County) (Segment 1B)
Design Financial Project ID 242484-7 (Orange County) (Segment 2)
Design Financial Project ID 242592-4 (Seminole County) (Segment 3)
Design Financial Project ID 408464-2 (Volusia County) (Segment 4)

Prepared for:
Florida Department of Transportation,
District 1 & District 5

February 09, 2017

Prepared by:
HNTB Corporation
610 Crescent Executive Ct., Suite 400
Lake Mary, FL 32746

I-4 Beyond the Ultimate

Table of Contents

PD&E FPID: 201210-2 (Segment 5)

PD&E FPID: 432100-1 (Segment 1A, 1B, 2, 3 & 4)

County / Segment / FPID	Sheet Numbers
Typical Sections Depicting Typical Cross Slopes (Segment 5)	T-1 to T-3
Typical Sections Depicting Typical Cross Slopes (Segments 1A, 1B, 2, 3, & 4)	T-4 to T-7
Polk County Typical Sections (Segment 5) (201210-3)	5-1 to 5-14
Osceola County Typical Sections (Segment 1A) (431456-1)	1A-1 to 1A-24
Orange County Typical Sections (Segment 1B) (242484-8)	1B-1 to 1B-46
Orange County Typical Sections (Segment 2) (242484-7)	2-1 to 2-13
Seminole County Typical Sections (Segment 3) (242592-4)	3-1 to 3-33
Volusia County Typical Sections (Segment 4) (408464-2)	4-1 to 4-35

I-4 Beyond the Ultimate

Typical Sections Depicting Typical Mainline Cross Slopes

PD&E FPID: 201210-2 (Segment 5)

PD&E FPID: 432100-1 (Segment 1A, 1B, 2, 3 & 4)

I-4 Mainline Typical Cross Slope Typical Sections

T-1	6 General Use Lanes + 4 Express Lanes (Segment 5)
T-2	8 General Use Lanes + 4 Express Lanes (Segment 5)
T-3	10 General Use Lanes + 4 Express Lanes (Segment 5)
T-4	6 General Use Lanes + 4 Express Lanes (Segment 1A, 1B, 2, 3 & 4)
T-5	8 General Use Lanes + 4 Express Lanes (Segment 1A, 1B, 2, 3 & 4)
T-6	10 General Use Lanes + 4 Express Lanes (Segment 1A, 1B, 2, 3 & 4)
T-7	12 General Use Lanes + 4 Express Lanes (Segment 1A, 1B, 2, 3 & 4)

PROJECT IDENTIFICATION

FINANCIAL PROJECT ID 201210-2-22-01 FEDERAL AID PROJECT NO. N/A COUNTY NAME POLK

SECTION NO. 16320 ROAD DESIGNATION SR 400 (I-4) LIMITS/MILEPOST MP 27.145 - 32.022

PROJECT DESCRIPTION WIDENING SR 400 (I-4) FROM WEST OF SR 25/US 27 TO WEST OF CR 532

PROPOSED ROADWAY TYPICAL SECTION

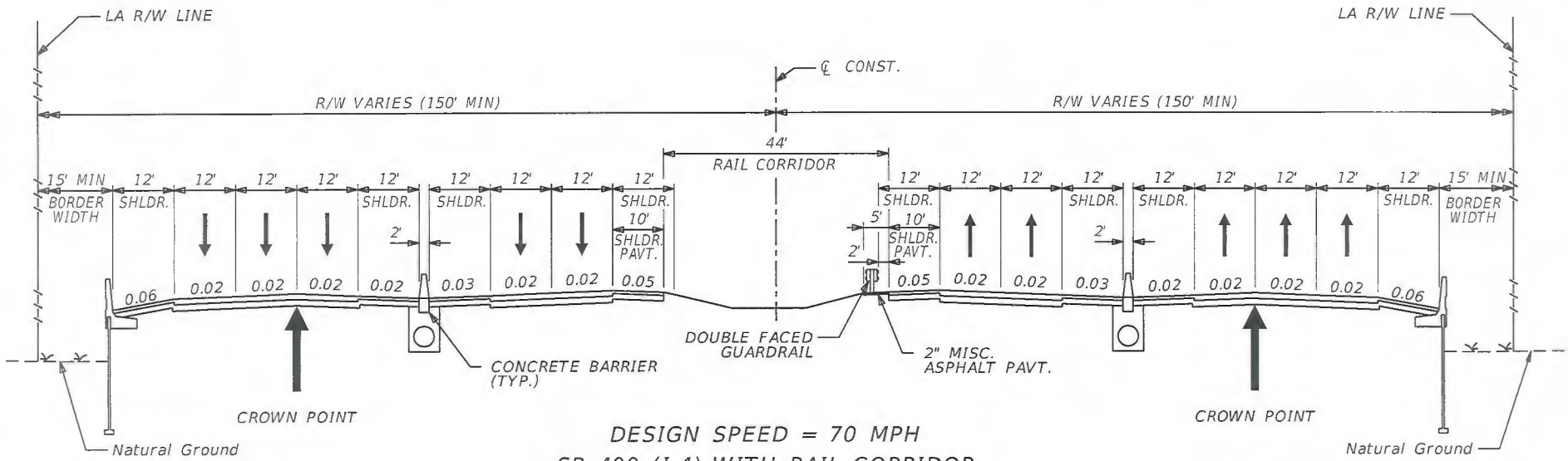

DESIGN SPEED = 70 MPH
SR 400 (I-4) WITH RAIL CORRIDOR
6+4 LANES

LENGTH OF 6+4 CONFIGURATION:
EB: 2.65 LANE MILES
WB: 3.42 LANE MILES

NOTE: TYPICAL SECTION CROSS SLOPES APPLY TO 0% TO 3%.
THIS TYPICAL USED TO ONLY REPRESENT CROSS SLOPES AND CROWN POINT.

T-1

ROBERT M. DENNEY LICENSE No. 58593 STATE OF FLORIDA PROFESSIONAL ENGINEER

APPROVED BY	FDOT CONCURRENCE	FHWA CONCURRENCE
ROBERT M. DENNEY, P.E. Engineer of Record 58593 — Date 8/31/17	B.A. Masing — BERNIE MASING, P.E. FDOT District Design Engineer — Date 8-16-17	FHWA Transportation Engineer — Date 1/12/18

HNTB CORPORATION
610 CRESCENT EXEC. CT.
SUITE 400
LAKE MARY, FL 32746
(407) 805-0355
CERT OF AUTH NO 6500

mbacal 2/9/2017 2:38:00 PM \\LKMw00\pmwork3\Jobs\59219 - I4 SAMR\TECHPROD\Typical Section Package\TYPDRD01-I-4 TYPICALS.DGN

PROJECT IDENTIFICATION

FINANCIAL PROJECT ID 201210-2-22-01 FEDERAL AID PROJECT NO. N/A COUNTY NAME POLK

SECTION NO. 16320 ROAD DESIGNATION SR 400 (I-4) LIMITS/MILEPOST MP 27.145 - 32.022

PROJECT DESCRIPTION WIDENING SR 400 (I-4) FROM WEST OF SR 25/US 27 TO WEST OF CR 532

PROPOSED ROADWAY TYPICAL SECTION

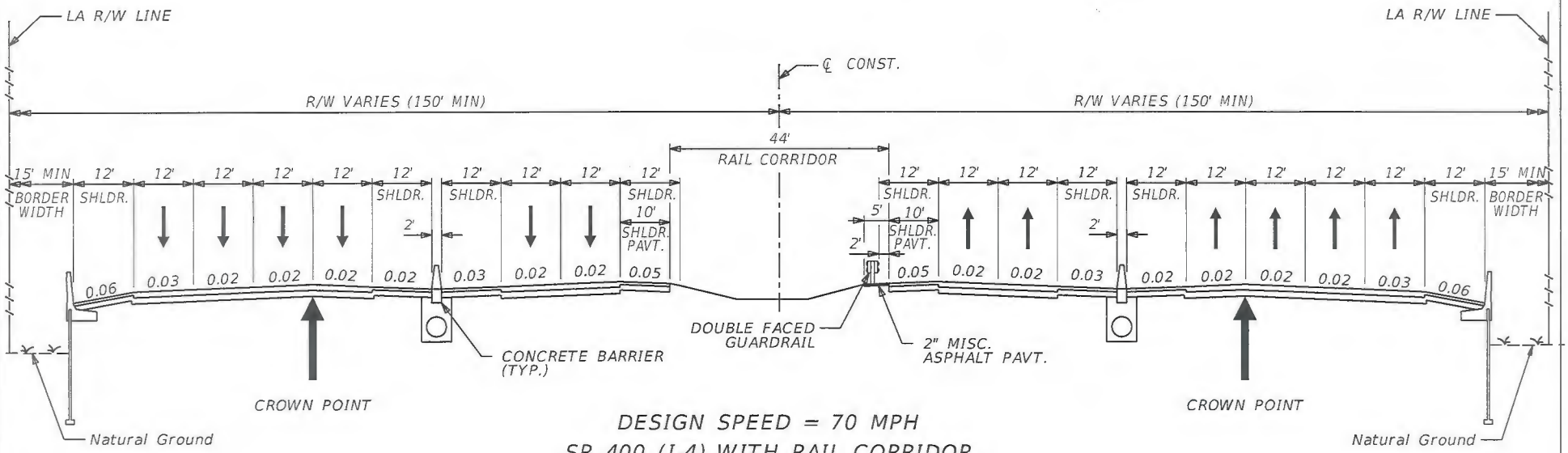

DESIGN SPEED = 70 MPH

SR 400 (I-4) WITH RAIL CORRIDOR

8+4 LANES

LENGTH OF 8+4 CONFIGURATION:
EB: 1.02 LANE MILES
WB: 0.71 LANE MILES

NOTE: TYPICAL SECTION CROSS SLOPES APPLY TO 0% TO 3%.
THIS TYPICAL USED TO ONLY REPRESENT CROSS SLOPES AND CROWN POINT.

T-2

ROBERT M. DENNEY LICENSE No. 58593 STATE OF FLORIDA PROFESSIONAL ENGINEER

APPROVED BY	FDOT CONCURRENCE	FHWA CONCURRENCE
ROBERT M. DENNEY, P.E. Engineer of Record 58593 — Date 2/9/17	B.A. Masing — BERNIE MASING, P.E. FDOT District Design Engineer — Date 8-16-17	FHWA Transportation Engineer — Date 1/17/18

HNTB CORPORATION
610 CRESCENT EXEC. CT.
SUITE 400
LAKE MARY, FL 32746
(407) 805-0355
CERT OF AUTH NO 6500

mbacal 2/9/2017 2:38:00 PM \\LKMw00\pmwork3\Jobs\59219 - I4 SAMR\TECHPROD\Typical Section Package\TYPDRD01-I-4 TYPICALS.DGN

PROJECT IDENTIFICATION

FINANCIAL PROJECT ID 201210-2-22-01 FEDERAL AID PROJECT NO. N/A COUNTY NAME POLK

SECTION NO. 16320 ROAD DESIGNATION SR 400 (I-4) LIMITS/MILEPOST MP 27.145 - 32.022

PROJECT DESCRIPTION WIDENING SR 400 (I-4) FROM WEST OF SR 25/US 27 TO WEST OF CR 532

PROPOSED ROADWAY TYPICAL SECTION

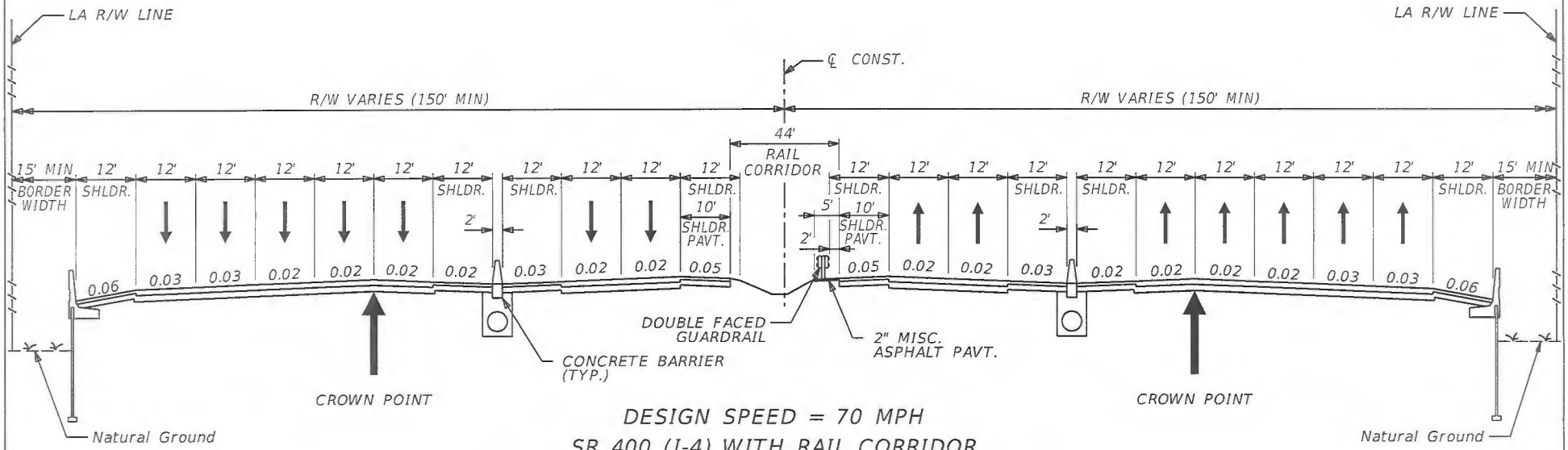

DESIGN SPEED = 70 MPH

SR 400 (I-4) WITH RAIL CORRIDOR

10+4 LANES

LENGTH OF 10+4 CONFIGURATION:
EB: 0.40 LANE MILES
WB: 0.34 LANE MILES

NOTE: TYPICAL SECTION CROSS SLOPES APPLY TO 0% TO 3%.
THIS TYPICAL USED TO ONLY REPRESENT CROSS SLOPES AND CROWN POINT.

T-3

APPROVED BY	FDOT CONCURRENCE	FHWA CONCURRENCE
ROBERT M. DENNEY, P.E. Engineer of Record 58593 — Date 3/9/17	B.A. Masing — BERNIE MASING, P.E. FDOT District Design Engineer — Date 8-16-17	FHWA Transportation Engineer — Date 1/17/18

ROBERT M. DENNEY LICENSE No. 58593 STATE OF FLORIDA PROFESSIONAL ENGINEER

HNTB CORPORATION
610 CRESCENT EXEC. CT.
SUITE 400
LAKE MARY, FL 32746
(407) 805-0355
CERT OF AUTH NO 6500

mbacal 2/9/2017 2:38:01 PM \\LKMw00\pmwork3\Jobs\59219 - I4 SAMR\TECHPROD\Typical Section Package\TYPDRD01-I-4 TYPICALS.DGN

PROJECT IDENTIFICATION

FINANCIAL PROJECT ID 432100-1-22-01 FEDERAL AID PROJECT NO. N/A COUNTY NAME OSCEOLA ORANGE SEMINOLE VOLUSIA

SECTION NO. 92130, 75280, 77160, 79110 ROAD DESIGNATION SR 400 (I-4) LIMITS/MILEPOST MP 0.000 - 7.885 (OSCEOLA) MP 0.000 - 9.528 (ORANGE) MP 4.050 - 14.135 (SEMINOLE) MP 0.000 - 10.227 (VOLUSIA)

PROJECT DESCRIPTION WIDENING SR 400 (I-4) FROM WEST OF CR 532 TO WEST OF SR 435 KIRKMAN ROAD AND FROM 1 MILE EAST OF SR 434 TO 1/2 MILE EAST OF SR 472.

PROPOSED ROADWAY TYPICAL SECTION

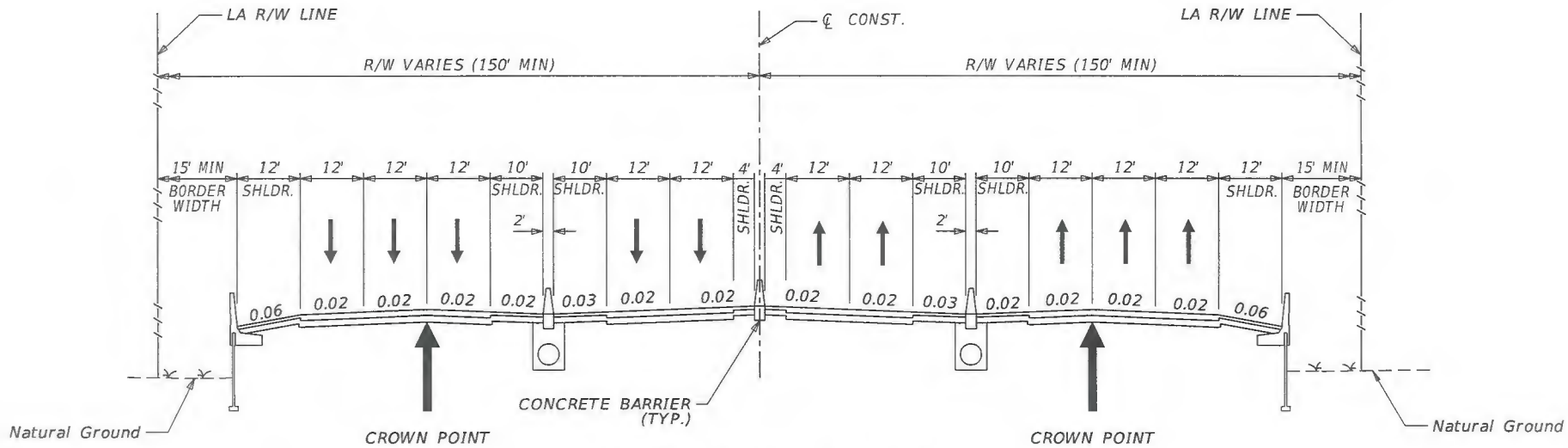

DESIGN SPEED = 70 MPH

SR 400 (I-4)

6+4 LANES

LENGTH OF 6+4 CONFIGURATION:
EB: 18.07 LANE MILES
WB: 20.43 LANE MILES

NOTE: TYPICAL SECTION CROSS SLOPES APPLY TO 0% TO 3%.
THIS TYPICAL USED TO ONLY REPRESENT CROSS SLOPES AND CROWN POINT.

T-4

APPROVED BY	FDOT CONCURRENCE	FHWA CONCURRENCE
ROBERT M. DENNEY, P.E. Date Engineer of Record 58593	ANNETTE K. BRENNAN, P.E. FDOT District Design Engineer Date 3/15/17	FHWA Transportation Engineer Date 1/17/18

HNTB CORPORATION
610 CRESCENT EXEC. CT.
SUITE 400
LAKE MARY, FL 32746
(407) 805-0355
CERT OF AUTH NO 6500

ROBERT M. DENNEY LICENSE No. 58593 STATE OF FLORIDA PROFESSIONAL ENGINEER

PROJECT IDENTIFICATION

FINANCIAL PROJECT ID 432100-1-22-01 FEDERAL AID PROJECT NO. N/A COUNTY NAME OSCEOLA ORANGE SEMINOLE VOLUSIA

SECTION NO. 92130, 75280, 77160, 79110 ROAD DESIGNATION SR 400 (I-4) LIMITS/MILEPOST MP 0.000 - 7.885 (OSCEOLA) MP 0.000 - 9.528 (ORANGE) MP 4.050 - 14.135 (SEMINOLE) MP 0.000 - 10.227 (VOLUSIA)

PROJECT DESCRIPTION WIDENING SR 400 (I-4) FROM WEST OF CR 532 TO WEST OF SR 435 KIRKMAN ROAD AND FROM 1 MILE EAST OF SR 434 TO 1/2 MILE EAST OF SR 472.

PROPOSED ROADWAY TYPICAL SECTION

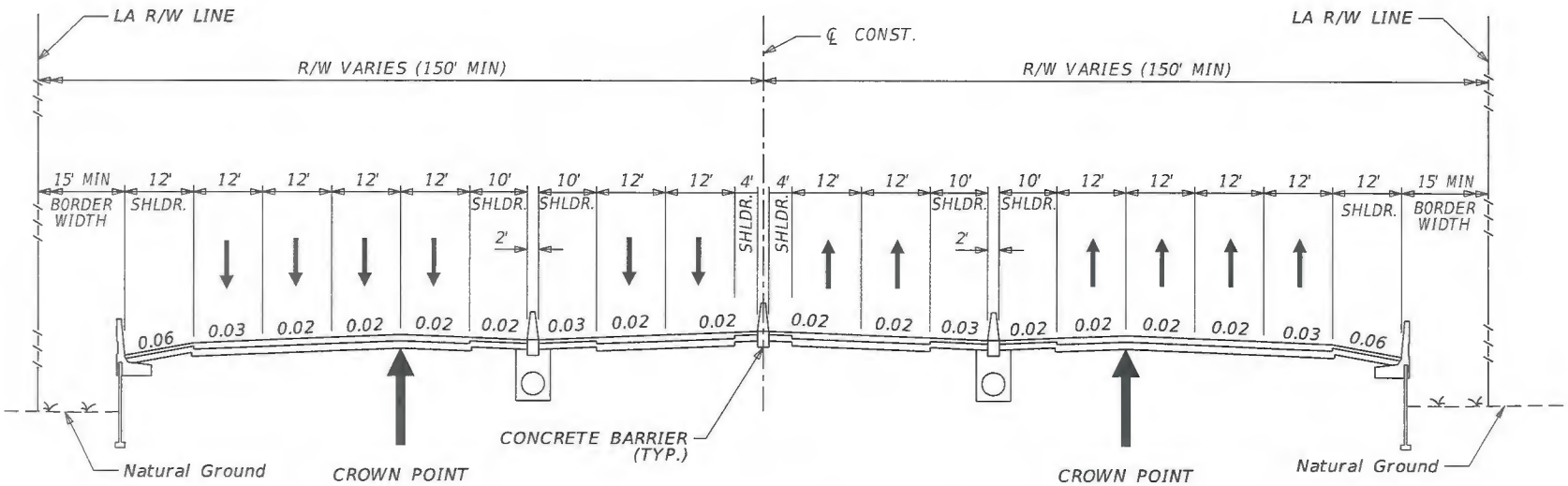

DESIGN SPEED = 70 MPH

SR 400 (I-4)

8+4 LANES

LENGTH OF 8+4 CONFIGURATION:
EB: 12.18 LANE MILES
WB: 13.12 LANE MILES

NOTE: TYPICAL SECTION CROSS SLOPES APPLY TO 0% TO 3%.
THIS TYPICAL USED TO ONLY REPRESENT CROSS SLOPES AND CROWN POINT.

T-5

APPROVED BY	FDOT CONCURRENCE	FHWA CONCURRENCE
ROBERT M. DENNEY, P.E. Date Engineer Of Record 58593	ANNETTE K. BRENNAN, P.E. FDOT District Design Engineer 3/15/17 Date	FHWA Transportation Engineer 1/17/18 Date

HNTB CORPORATION
610 CRESCENT EXEC. CT.
SUITE 400
LAKE MARY, FL 32746
(407) 805-0355
CERT OF AUTH NO 6500

ROBERT M. DENNEY LICENSE No. 58593 STATE OF FLORIDA PROFESSIONAL ENGINEER

PROJECT IDENTIFICATION

FINANCIAL PROJECT ID 432100-1-22-01 FEDERAL AID PROJECT NO. N/A COUNTY NAME OSCEOLA ORANGE SEMINOLE VOLUSIA

SECTION NO. 92130, 75280, 77160, 79110 ROAD DESIGNATION SR 400 (I-4) LIMITS/MILEPOST MP 0.000 - 7.885 (OSCEOLA) MP 0.000 - 9.528 (ORANGE) MP 4.050 - 14.135 (SEMINOLE) MP 0.000 - 10.227 (VOLUSIA)

PROJECT DESCRIPTION WIDENING SR 400 (I-4) FROM WEST OF CR 532 TO WEST OF SR 435 KIRKMAN ROAD AND FROM 1 MILE EAST OF SR 434 TO 1/2 MILE EAST OF SR 472.

PROPOSED ROADWAY TYPICAL SECTION

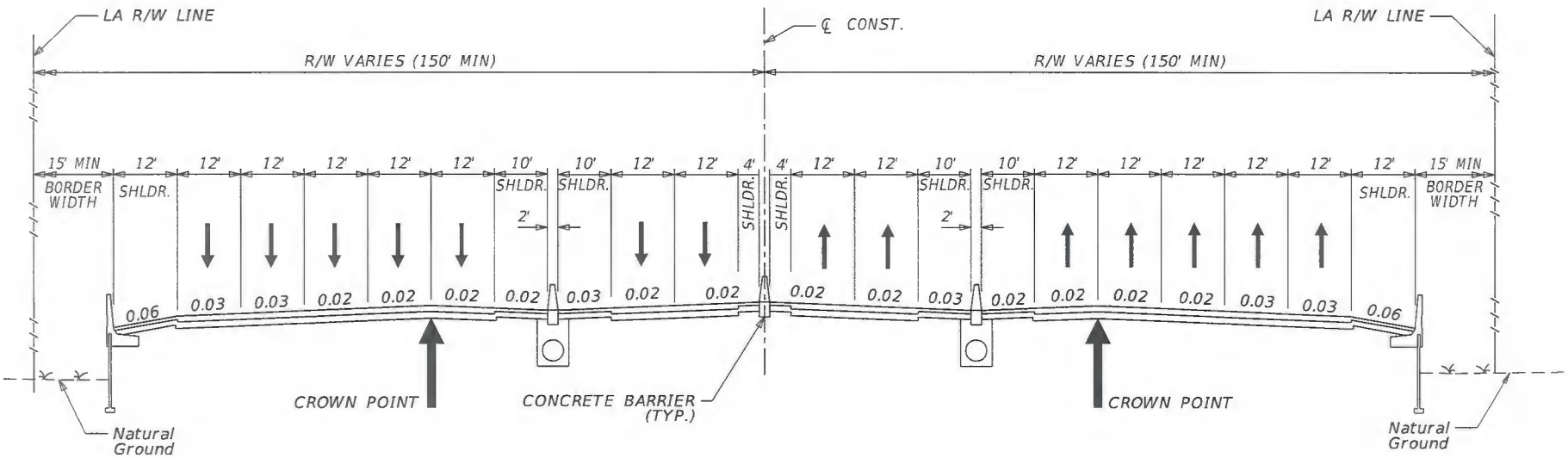

DESIGN SPEED = 70 MPH

SR 400 (I-4)

10+4 LANES

LENGTH OF 10+4 CONFIGURATION:
EB: 7.56 LANE MILES
WB: 2.60 LANE MILES

NOTE: TYPICAL SECTION CROSS SLOPES APPLY TO 0% TO 3%.
THIS TYPICAL USED TO ONLY REPRESENT CROSS SLOPES AND CROWN POINT.

T-6

ROBERT M. DENNEY LICENSE No. 58593 STATE OF FLORIDA PROFESSIONAL ENGINEER

APPROVED BY	FDOT CONCURRENCE	FHWA CONCURRENCE
ROBERT M. DENNEY, P.E. Engineer Of Record 98593 Date 2-9-17	ANNETTE K. BRENNAN, P.E. FDOT District Design Engineer Date 3/15/17	FHWA Transportation Engineer Date 1/17/18

HNTB CORPORATION
610 CRESCENT EXEC. CT.
SUITE 400
LAKE MARY, FL 32746
(407) 805-0355
CERT OF AUTH NO 6500

mbacal 2/9/2017 2:38:02 PM \\LKMw00\pmwork3\Jobs\59219 - I4 SAMR\TECHPROD\Typical Section Package\TYPDRD01-I-4 TYPICALS.DGN

PROJECT IDENTIFICATION

FINANCIAL PROJECT ID 432100-1-22-01 FEDERAL AID PROJECT NO. N/A COUNTY NAME OSCEOLA ORANGE SEMINOLE VOLUSIA

SECTION NO. 92130, 75280, 77160, 79110 ROAD DESIGNATION SR 400 (I-4) LIMITS/MILEPOST MP 0.000 - 7.885 (OSCEOLA) MP 0.000 - 9.528 (ORANGE) MP 4.050 - 14.135 (SEMINOLE) MP 0.000 - 10.227 (VOLUSIA)

PROJECT DESCRIPTION WIDENING SR 400 (I-4) FROM WEST OF CR 532 TO WEST OF SR 435 KIRKMAN ROAD AND FROM 1 MILE EAST OF SR 434 TO 1/2 MILE EAST OF SR 472.

PROPOSED ROADWAY TYPICAL SECTION

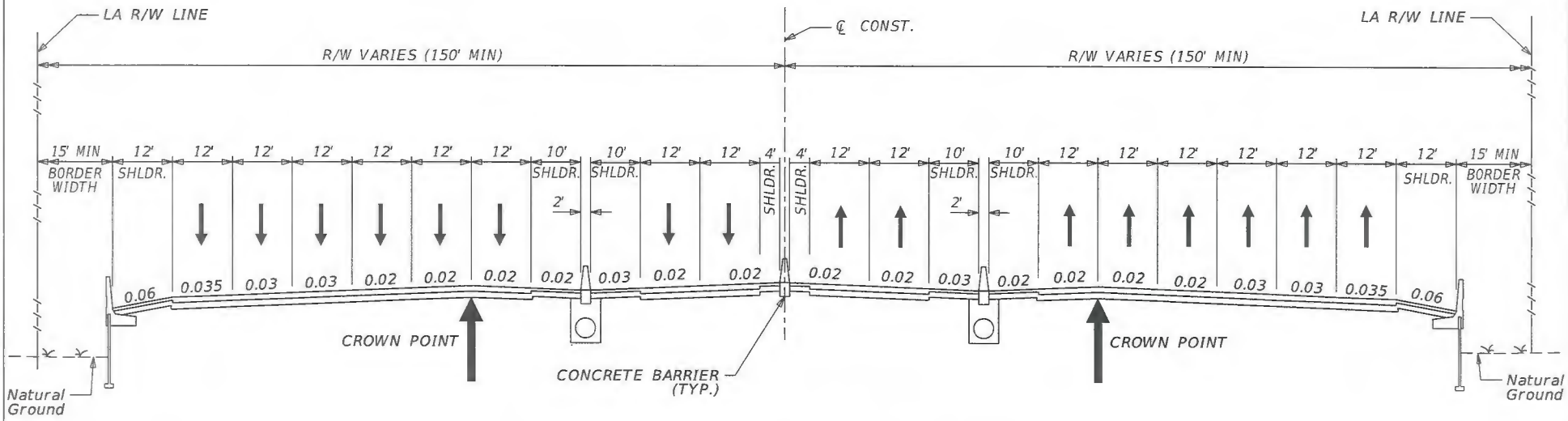

LENGTH OF 12+4 CONFIGURATION:
EB: 0.46 LANE MILES
WB: 1.44 LANE MILES

DESIGN SPEED = 70 MPH
SR 400 (I-4)
12+4 LANES

NOTE: TYPICAL SECTION CROSS SLOPES APPLY TO 0% TO 3%.
THIS TYPICAL USED TO ONLY REPRESENT CROSS SLOPES AND CROWN POINT.

T-7

APPROVED BY	FDOT CONCURRENCE	FHWA CONCURRENCE
ROBERT M. DENNEY, P.E. Date Engineer Of Record 58593	ANNETTE K. BRENNAN, P.E. FDOT District Design Engineer 3/15/17 Date	FHWA Transportation Engineer 1/17/18 Date

HNTB CORPORATION
610 CRESCENT EXEC. CT.
SUITE 400
LAKE MARY, FL 32746
(407) 805-0355
CERT OF AUTH NO 6500

ROBERT M. DENNEY LICENSE No. 58593 STATE OF FLORIDA PROFESSIONAL ENGINEER

mbacal 2/9/2017 2:38:02 PM \\LKMw00\pmwork3\Jobs\59219 - I4 SAMR\TECHPROD\Typical Section Package\TYPDRD01-I-4 TYPICALS.DGN

I-4 Beyond the Ultimate

Orange County Typical Section Package Index

PD&E FPID: 432100-1 (Segment 2)
Design FPID: 242484-7

I-4 Mainline

2-1 Key Sheet
2-2 I-4 Project Controls (DS = 70 mph)
2-2A I-4 Project Controls (DS = 60 mph)
2-3 I-4 Typical Section with Rail Corridor
2-4 I-4 Typical Section without Rail Corridor (DS = 70 mph)
2-4A I-4 Typical Section without Rail Corridor (DS = 60 mph)
2-5 I-4 Bridge over SR 482 (Sand Lake Road) (Replace)
2-6 I-4 Westbound C-D Road
2-7 I-4 Westbound C-D Road Bridge Section

Ramps

2-8 One Lane Ramp
2-9 Two Lane Ramp
2-10 Three Lane Ramp
2-11 One Lane Bridge Ramp
2-12 Two Lane Bridge Ramp

SR 528

2-13 SR 528 Project Controls
2-14 SR 528 Roadway Section (1 Express Lane Both Directions)
2-15 SR 528 Bridge Section Over West Entrance Road

SR 482 (Sand Lake Road)

2-16 SR 482 Project Controls
2-17 SR 482 Roadway Section
2-18 SR 482 Roadway Section (East of I-4)

Turkey Lake Road

2-19 Turkey Lake Road Project Controls
2-20 Turkey Lake Road Near SR 528
2-21 Turkey Lake Road Near Sand Lake Road

Universal Boulevard

2-22 I-4 Under Universal Boulevard

STATE OF FLORIDA

DEPARTMENT OF TRANSPORTATION

FINANCIAL PROJECT ID 432100-1-22-01
(FEDERAL FUNDS)

ORANGE COUNTY (75280)

STATE ROAD NO. 400 (I-4)
I-4 BEYOND THE ULTIMATE
TYPICAL SECTION PACKAGE

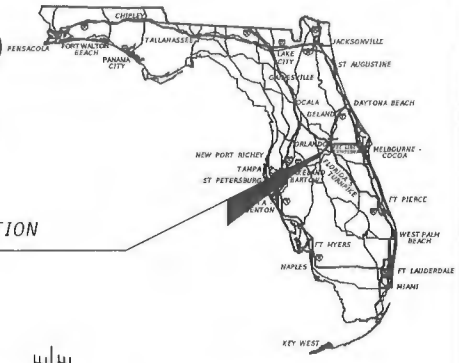

PROJECT LOCATION

N

0 3 6
Miles

END SEGMENT 2
℄ EXIST. SR 400
STA. 1550+23.13
MP 9.528 (ORANGE CO.)

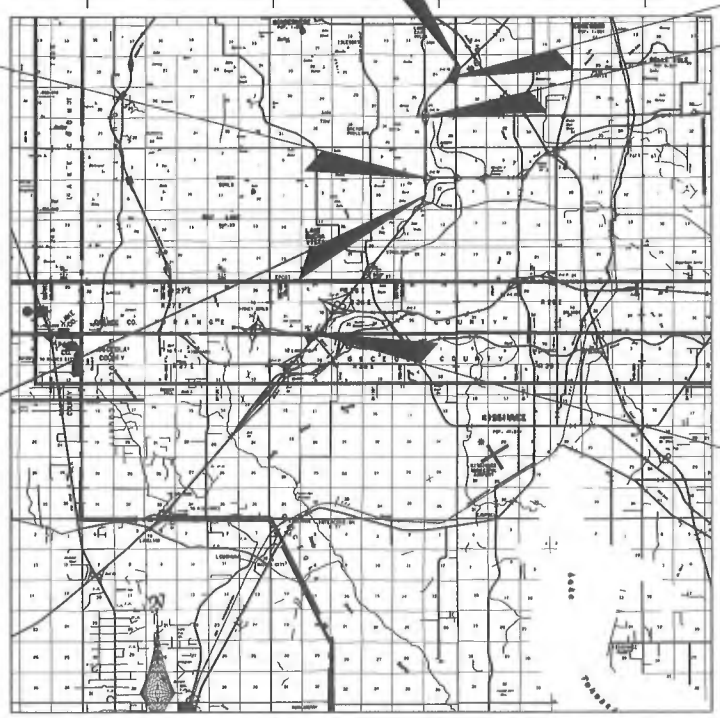

START SEGMENT 2
℄ EXIST. SR 400
STA. 1345+48.48
MP 5.650 (ORANGE CO.)

OSCEOLA / ORANGE CO. DIVIDE
MP 7.885 / 0.000

PROJECT LENGTH IS BASED ON ℄ OF CONSTRUCTION

LENGTH OF PROJECT		
	LINEAR FEET	MILES
ROADWAY	20289.83	3.843
BRIDGES	186.01	0.035
NET LENGTH OF PROJECT	20475.84	3.878
EXCEPTIONS	--	--
GROSS LENGTH OF PROJECT	20475.84	3.878

FDOT PROJECT MANAGER: BEATA STYŚ-PALASZ, PE

SHEET 2-1

PROJECT IDENTIFICATION

FINANCIAL PROJECT ID: 432100-1-22-01 COUNTY (SECTION): ORANGE (75280)

PROJECT DESCRIPTION: WIDENING SR 400 (I-4) FROM WEST OF CR 532 TO WEST OF SR 435 (KIRKMAN RD.) AND FROM 1 MILE EAST OF SR 434 TO 1/2 MILE EAST OF SR 472.

PROJECT CONTROLS (SR 400/I-4)

FUNCTIONAL CLASSIFICATION

( ) RURAL
(X) URBAN

(X)	FREEWAY/EXPWY.	( )	MAJOR COLL.
( )	PRINCIPAL ART.	( )	MINOR COLL.
( )	MINOR ART.	( )	LOCAL

HIGHWAY SYSTEM

Yes	No	
(X)	( )	NATIONAL HIGHWAY SYSTEM
(X)	( )	FLORIDA INTRASTATE HIGHWAY SYSTEM
(X)	( )	STRATEGIC INTERMODAL SYSTEM
(X)	( )	STATE HIGHWAY SYSTEM
( )	(X)	OFF STATE HIGHWAY SYSTEM

ACCESS CLASSIFICATION

(X) 1 - FREEWAY
( ) 2 - RESTRICTIVE w/Service Roads
( ) 3 - RESTRICTIVE w/660 ft. Connection Spacing
( ) 4 - NON-RESTRICTIVE w/2640 ft. Signal Spacing
( ) 5 - RESTRICTIVE w/440 ft. Connection Spacing
( ) 6 - NON-RESTRICTIVE w/1320 ft. Signal Spacing
( ) 7 - BOTH MEDIAN TYPES

TRAFFIC

	YEAR	AADT
OPENING	2020	180,000
INTERIM	2030	215,000
DESIGN	2040	246,000

		DISTRIBUTION	
DESIGN SPEED	70 MPH	K	7.4
POSTED SPEED	70 MPH	D	52.92
		T_{24}	6.5%

CRITERIA

(X) NEW CONSTRUCTION / RECONSTRUCTION
( ) RRR INTERSTATE / FREEWAY
( ) RRR NON-INTERSTATE / FREEWAY
( ) TDLC / NEW CONSTRUCTION / RECONSTRUCTION
( ) TDLC / RRR
( ) MANUAL OF UNIFORM MINIMUM STANDARDS (FLORIDA GREENBOOK) (OFF-STATE HIGHWAY SYSTEM ONLY)

DESIGN SPEED APPROVALS

A K Brennan — 3/17/17
DISTRICT DESIGN ENGINEER — DATE

James Stitz Jr — 4/10/17
DISTRICT TRAFFIC OPERATIONS ENGINEER — DATE

LIST ANY POTENTIAL EXCEPTIONS AND VARIATIONS RELATED TO TYPICAL SECTION ELEMENTS:

BORDER WIDTH (VARIATION) - FOR THE BORDER WIDTHS LESS THAN 94-FT (94-FT REQUIRED)
SHOULDER WIDTH (VARIATION) - FOR THE 10-FT MEDIAN GUL SHOULDER (12-FT REQUIRED)
SHOULDER WIDTH (VARIATION) - FOR THE 4-FT MEDIAN EXPRESS LANE SHOULDER (6-FT REQUIRED)

LIST MAJOR STRUCTURES LOCATION/DESCRIPTION - REQUIRING INDEPENDENT STRUCTURE DESIGN:

SR 528	(750087, 750180)
WEST ENTRANCE DRIVE	(754128)
SAND LAKE ROAD	(750335, 750336)
UNIVERSAL BLVD.	(750485)

LIST MAJOR UTILITIES WITHIN PROJECT CORRIDOR:
GAS (CENTRAL FLORIDA GAS)
WATER (ORANGE COUNTY UTILITIES)
COMMUNICATIONS (BRIGHTHOUSE NETWORKS, COMCAST, LEVEL 3, VERIZON)
WASTEWATER (ORANGE COUNTY UTILITIES)
ELECTRIC (DUKE ENERGY DISTRIBUTION, DUKE ENERGY TRANSMISSION)

LIST OTHER INFORMATION PERTINENT TO DESIGN OF PROJECT:

N/A

SHEET 2-2

PROJECT IDENTIFICATION

FINANCIAL PROJECT ID: 432100-1-22-01 COUNTY (SECTION): ORANGE (75280)

PROJECT DESCRIPTION: WIDENING SR 400 (I-4) FROM WEST OF CR 532 TO WEST OF SR 435 (KIRKMAN RD.) AND FROM 1 MILE EAST OF SR 434 TO 1/2 MILE EAST OF SR 472.

PROJECT CONTROLS (SR 400/I-4)

FUNCTIONAL CLASSIFICATION

( ) RURAL
(X) URBAN

(X) FREEWAY/EXPWY. ( ) MAJOR COLL.
( ) PRINCIPAL ART. ( ) MINOR COLL.
( ) MINOR ART. ( ) LOCAL

HIGHWAY SYSTEM

Yes	No	
(X)	( )	NATIONAL HIGHWAY SYSTEM
(X)	( )	FLORIDA INTRASTATE HIGHWAY SYSTEM
(X)	( )	STRATEGIC INTERMODAL SYSTEM
(X)	( )	STATE HIGHWAY SYSTEM
( )	(X)	OFF STATE HIGHWAY SYSTEM

ACCESS CLASSIFICATION

(X) 1 - FREEWAY
( ) 2 - RESTRICTIVE w/Service Roads
( ) 3 - RESTRICTIVE w/660 ft. Connection Spacing
( ) 4 - NON-RESTRICTIVE w/2640 ft. Signal Spacing
( ) 5 - RESTRICTIVE w/440 ft. Connection Spacing
( ) 6 - NON-RESTRICTIVE w/1320 ft. Signal Spacing
( ) 7 - BOTH MEDIAN TYPES

TRAFFIC

	YEAR	AADT
OPENING	2020	180,000
INTERIM	2030	215,000
DESIGN	2040	246,000

		DISTRIBUTION	
DESIGN SPEED	60 MPH	K	7.4
POSTED SPEED	60 MPH	D	52.92
		T_{24}	6.5%

CRITERIA

(X) NEW CONSTRUCTION / RECONSTRUCTION
( ) RRR INTERSTATE / FREEWAY
( ) RRR NON-INTERSTATE / FREEWAY
( ) TDLC / NEW CONSTRUCTION / RECONSTRUCTION
( ) TDLC / RRR
( ) MANUAL OF UNIFORM MINIMUM STANDARDS (FLORIDA GREENBOOK) (OFF-STATE HIGHWAY SYSTEM ONLY)

DESIGN SPEED APPROVALS

DISTRICT DESIGN ENGINEER — DATE 12/17/17

DISTRICT TRAFFIC OPERATIONS ENGINEER — DATE

LIST ANY POTENTIAL EXCEPTIONS AND VARIATIONS RELATED TO TYPICAL SECTION ELEMENTS:

BORDER WIDTH (VARIATION) - FOR THE BORDER WIDTHS LESS THAN 94-FT (94-FT REQUIRED)
SHOULDER WIDTH (VARIATION) - FOR THE 10-FT MEDIAN GUL SHOULDER (12-FT REQUIRED)
SHOULDER WIDTH (VARIATION) - FOR THE 4-FT MEDIAN EXPRESS LANE SHOULDER (6-FT REQUIRED)

LIST MAJOR STRUCTURES LOCATION/DESCRIPTION - REQUIRING INDEPENDENT STRUCTURE DESIGN:

SR 528	(750087, 750180)
WEST ENTRANCE DRIVE	(754128)
SAND LAKE ROAD	(750335, 750336)
UNIVERSAL BLVD.	(750485)

LIST MAJOR UTILITIES WITHIN PROJECT CORRIDOR:
GAS (CENTRAL FLORIDA GAS)
WATER (ORANGE COUNTY UTILITIES)
COMMUNICATIONS (BRIGHTHOUSE NETWORKS, COMCAST, LEVEL 3, VERIZON)
WASTEWATER (ORANGE COUNTY UTILITIES)
ELECTRIC (DUKE ENERGY DISTRIBUTION, DUKE ENERGY TRANSMISSION)

LIST OTHER INFORMATION PERTINENT TO DESIGN OF PROJECT:

N/A

SHEET 2-2A

PROJECT IDENTIFICATION

FINANCIAL PROJECT ID 432100-1-22-01 FEDERAL AID PROJECT NO. N/A COUNTY NAME ORANGE

SECTION NO. 75280 ROAD DESIGNATION SR 400 (I-4) LIMITS/MILEPOST MP 0.000 - 9.528

PROJECT DESCRIPTION WIDENING SR 400 (I-4) FROM WEST OF CR 532 TO WEST OF SR 435 KIRKMAN ROAD AND FROM 1 MILE EAST OF SR 434 TO 1/2 MILE EAST OF SR 472.

PROPOSED ROADWAY TYPICAL SECTION

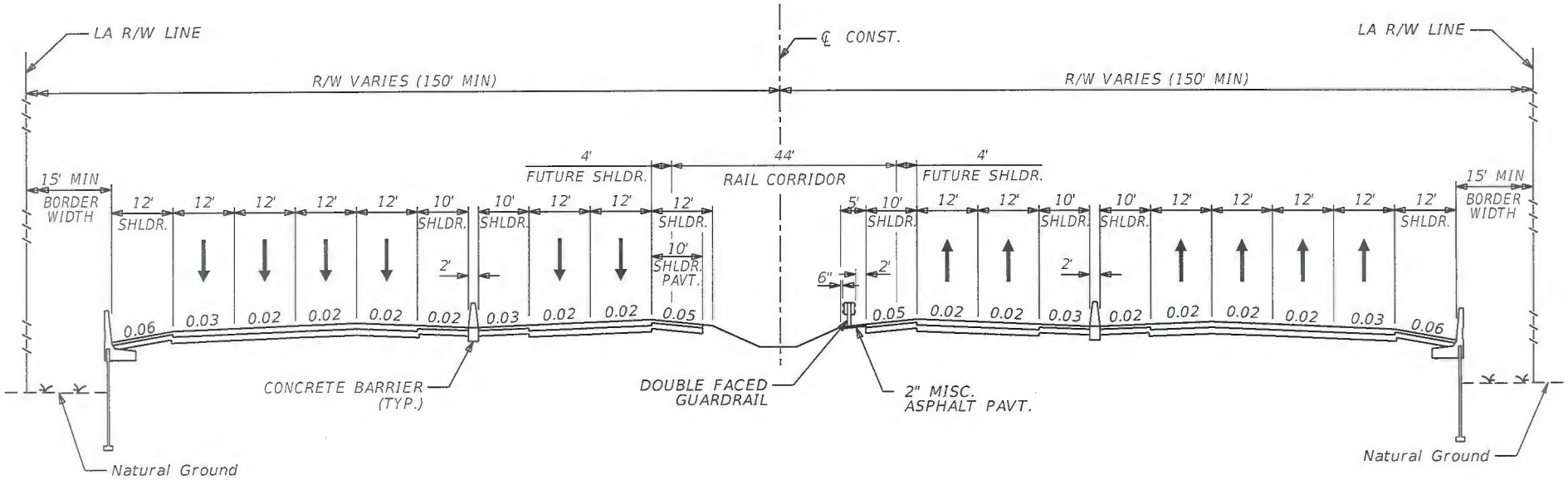

DESIGN SPEED = 70 MPH
SR 400 (I-4) WITH RAIL CORRIDOR
STA 1345+48.48 TO 1365+00.00

SHEET 2-3

APPROVED BY	FDOT CONCURRENCE	FHWA CONCURRENCE
ROBERT M. DENNEY, P.E. Engineer Of Record 58593 — Date 4/5/17	ANNETTE K. BRENNAN, P.E. FDOT District Design Engineer — Date 3/17/17	FHWA Transportation Engineer — Date 1/17/18

HNTB CORPORATION
610 CRESCENT EXEC. CT.
SUITE 400
LAKE MARY, FL 32746
(407) 805-0355
CERT OF AUTH NO 6500

ROBERT M. DENNEY LICENSE No. 58593 STATE OF FLORIDA PROFESSIONAL ENGINEER

amourad 4/5/2017 12:32:22 PM \\LKMw00\pmwork3\Jobs\59219 - I4 SAMR\TECHPROD\Typical Section Package\TYPDRD01-I-4 TYPICALS.DGN

PROJECT IDENTIFICATION

FINANCIAL PROJECT ID 432100-1-22-01 FEDERAL AID PROJECT NO. N/A COUNTY NAME ORANGE

SECTION NO. 75280 ROAD DESIGNATION SR 400 (I-4) LIMITS/MILEPOST MP 0.000 - 9.528

PROJECT DESCRIPTION WIDENING SR 400 (I-4) FROM WEST OF CR 532 TO WEST OF SR 435 KIRKMAN ROAD AND FROM 1 MILE EAST OF SR 434 TO 1/2 MILE EAST OF SR 472.

PROPOSED ROADWAY TYPICAL SECTION

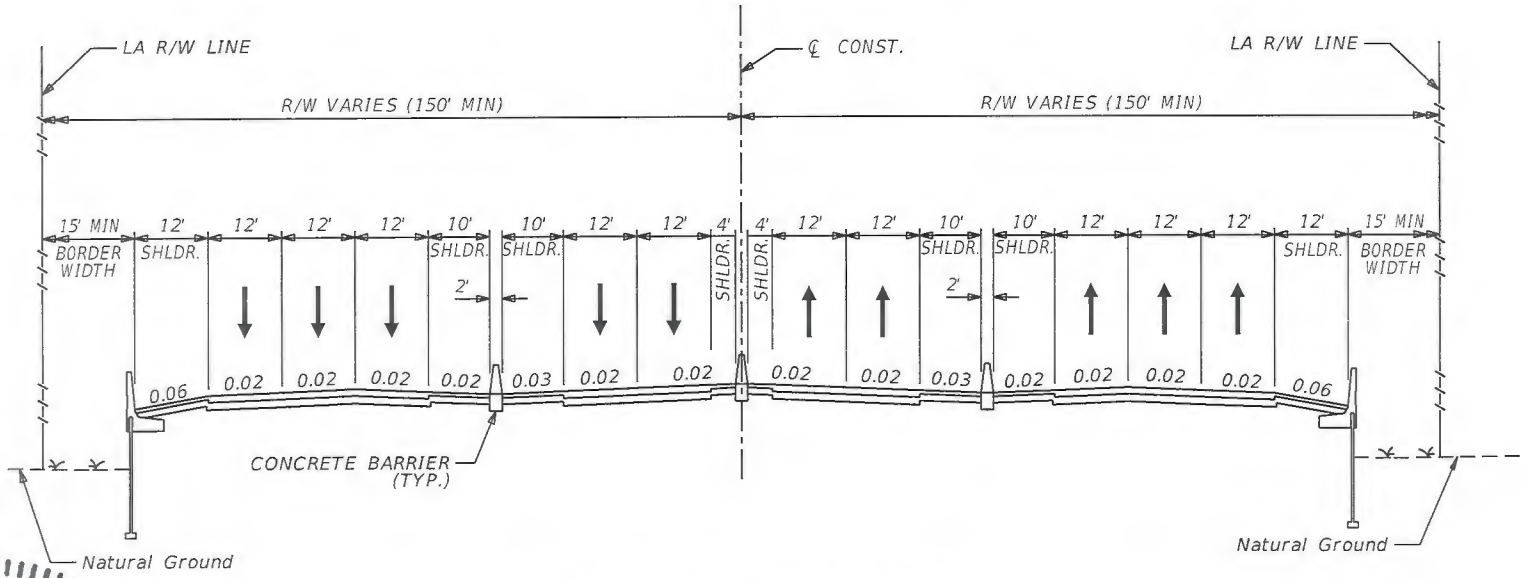

DESIGN SPEED = 70 MPH

SR 400 (I-4) WITHOUT RAIL CORRIDOR

STA 1365+00.00 TO 1488+80.00

SHEET 2-4

APPROVED BY	FDOT CONCURRENCE	FHWA CONCURRENCE
ROBERT M. DENNEY, P.E. Engineer of Record 58593 — Date 1/17	MARIO BIZZIO, P.E. FDOT District Design Engineer — Date 12/11/17	FHWA Transportation Engineer — Date 1/17/18

ROBERT M. DENNEY LICENSE No. 58593 STATE OF FLORIDA PROFESSIONAL ENGINEER

HNTB CORPORATION
610 CRESCENT EXEC. CT.
SUITE 400
LAKE MARY, FL 32746
(407) 805-0355
CERT OF AUTH NO 6500

PROJECT IDENTIFICATION

FINANCIAL PROJECT ID 432100-1-22-01 FEDERAL AID PROJECT NO. N/A COUNTY NAME ORANGE

SECTION NO. 75280 ROAD DESIGNATION SR 400 (I-4) LIMITS/MILEPOST MP 0.000 - 9.528

PROJECT DESCRIPTION WIDENING SR 400 (I-4) FROM WEST OF CR 532 TO WEST OF SR 435 KIRKMAN ROAD AND FROM 1 MILE EAST OF SR 434 TO 1/2 MILE EAST OF SR 472.

PROPOSED ROADWAY TYPICAL SECTION

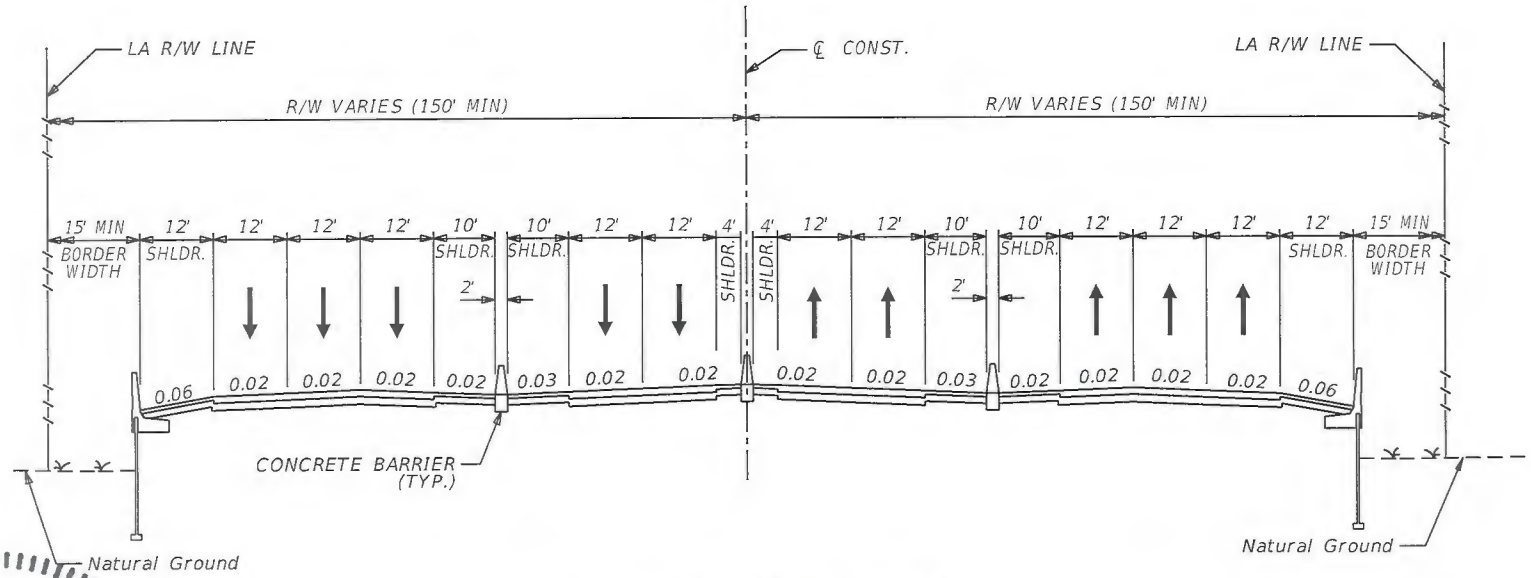

DESIGN SPEED = 60 MPH
SR 400 (I-4) WITHOUT RAIL CORRIDOR
STA 1488+80.00 TO 1550+23.13

SHEET 2-4A

APPROVED BY	FDOT CONCURRENCE	FHWA CONCURRENCE
ROBERT M. DENNEY, P.E. Engineer Of Record 58593 — Date 12/11/17	MARIO BIZZIO, P.E. FDOT District Design Engineer — Date 12/11/17	FHWA Transportation Engineer — Date 1/17/18

HNTB CORPORATION
610 CRESCENT EXEC. CT.
SUITE 400
LAKE MARY, FL 32746
(407) 805-0355
CERT OF AUTH NO 6500

ROBERT M. DENNEY LICENSE No. 58593 STATE OF FLORIDA PROFESSIONAL ENGINEER

PROJECT IDENTIFICATION

FINANCIAL PROJECT ID 432100-1-22-01 FEDERAL AID PROJECT NO. N/A COUNTY NAME ORANGE

SECTION NO. 75280 ROAD DESIGNATION SR 400 (I-4) LIMITS/MILEPOST MP 0.000 - 9.528

PROJECT DESCRIPTION WIDENING SR 400 (I-4) FROM WEST OF CR 532 TO WEST OF SR 435 KIRKMAN ROAD AND FROM 1 MILE EAST OF SR 434 TO 1/2 MILE EAST OF SR 472.

Ramp	Design Speed
SEGMENT 2	
I-4 WB EXPRESS LANE TO SR 528 EB	50
I-4 EB EXPRESS LANE TO SR 528 EB	50
SR 528 WB TO I-4 WB EXPRESS LANES	50
SR 528 WB TO I-4 EB EXPRESS LANES	50
I-4 WB GUL TO SAND LAKE ROAD	50
I-4 WB GUL TO TURKEY LAKE ROAD	50

PROPOSED ROADWAY TYPICAL SECTION

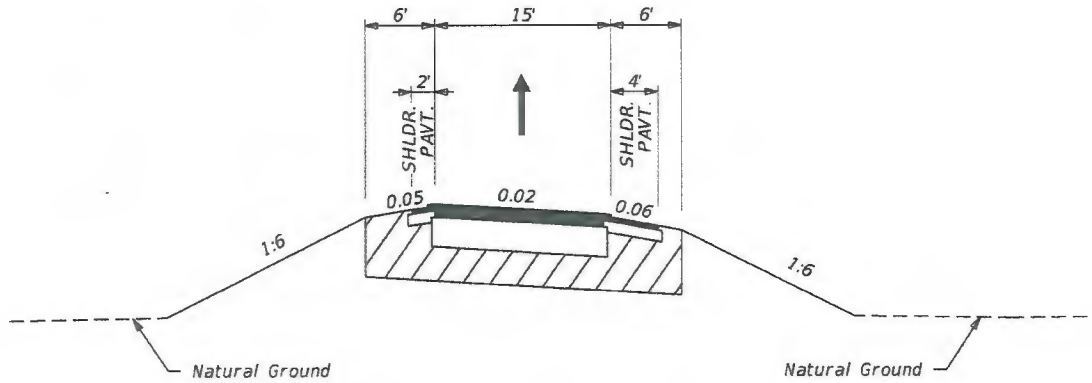

SR 400 (I-4)
ONE LANE RAMP

SHEET 2-5

APPROVED BY	FDOT CONCURRENCE	FHWA CONCURRENCE
ROBERT M. DENNEY, P.E. Date Engineer of Record 58593 HNTB CORPORATION 610 CRESCENT EXEC. CT. SUITE 400 LAKE MARY, FL 32746 (407) 805-0355 CERT OF AUTH NO 6500	ANNETTE K. BRENNAN, P.E. 12/29/16 Date FDOT District Design Engineer	FHWA Transportation Engineer 1/17/18 Date

ROBERT M. DENNEY LICENSE No. 58593 STATE OF FLORIDA PROFESSIONAL ENGINEER

mbacal 11/28/2016 1:35:25 PM \\LKMw00\pmwork3\Jobs\59219 - I4 SAMR\TECHPROD\Typical Section Package\TYPDRD01-RAMPS.DGN

PROJECT IDENTIFICATION

FINANCIAL PROJECT ID 432100-1-22-01 FEDERAL AID PROJECT NO. N/A COUNTY NAME ORANGE

SECTION NO. 75280 ROAD DESIGNATION SR 400 (I-4) LIMITS/MILEPOST MP 0.000 - 9.528

PROJECT DESCRIPTION WIDENING SR 400 (I-4) FROM WEST OF CR 532 TO WEST OF SR 435 KIRKMAN ROAD AND FROM 1 MILE EAST OF SR 434 TO 1/2 MILE EAST OF SR 472.

Ramp	Design Speed
SEGMENT 2	
I-4 EB GUL TO SR 528 EB	50
I-4 EB AND WB EXPRESS TO SR 528 EB EXPRESS	50
SR 528 WB EXPRESS TO I-4 EB AND WB EXPRESS	50
SR 528 WB TO I-4 WB GUL	50
SR 528 WB TO I-4 EB GUL	50
I-4 WB GUL TO SR 528 EB	50
I-4 EB GUL TO SAND LAKE RD	50
I-4 WB GUL TO SAND LAKE RD	50
SAND LAKE RD TO I-4 EB GUL	50
SAND LAKE RD TO I-4 WB GUL	50

PROPOSED ROADWAY TYPICAL SECTION

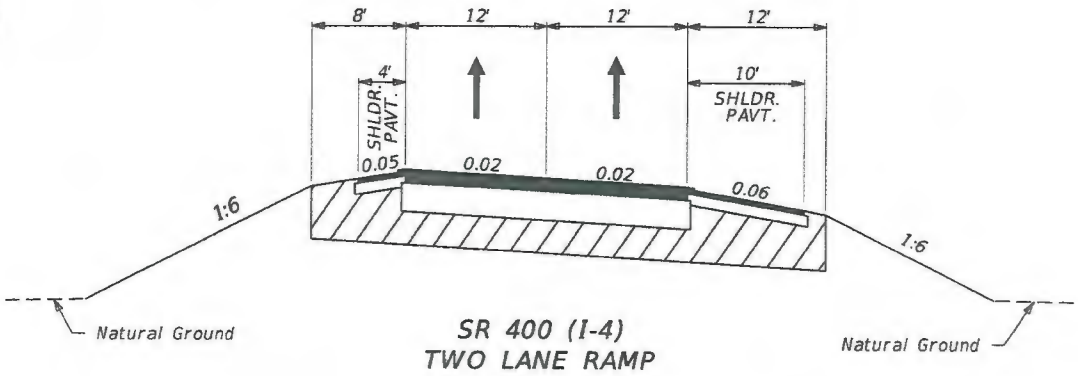

SR 400 (I-4)
TWO LANE RAMP

SHEET 2-6

APPROVED BY	FDOT CONCURRENCE	FHWA CONCURRENCE
ROBERT M. DENNEY, P.E. Date Engineer of Record 58593	ANNETTE K. BRENNAN, P.E. 12/29/16 Date FDOT District Design Engineer	FHWA Transportation Engineer 1/17/18 Date

HNTB CORPORATION
610 CRESCENT EXEC. CT.
SUITE 400
LAKE MARY, FL 32746
(407) 805-0355
CERT OF AUTH NO 6500

ROBERT M. DENNEY LICENSE No. 58593 STATE OF FLORIDA PROFESSIONAL ENGINEER

mbacal 11/28/2016 1:35:25 PM \\LKMw00\pmwork3\Jobs\59219 - I4 SAMR\TECHPROD\Typical Section Package\TYPDRD01-RAMPS.DGN

PROJECT IDENTIFICATION

FINANCIAL PROJECT ID 432100-1-22-01 FEDERAL AID PROJECT NO. N/A COUNTY NAME ORANGE

SECTION NO. 75280 ROAD DESIGNATION SR 400 (I-4) LIMITS/MILEPOST MP 0.000 - 9.528

PROJECT DESCRIPTION WIDENING SR 400 (I-4) FROM WEST OF CR 532 TO WEST OF SR 435 KIRKMAN ROAD AND FROM 1 MILE EAST OF SR 434 TO 1/2 MILE EAST OF SR 472.

Ramp	Design Speed
SEGMENT 2	
SR 528 WB GUL TO I-4 EB AND WB GUL	50
SAND LAKE RD TO I-4 EB GUL	50
SAND LAKE RD TO I-4 WB GUL	50

PROPOSED ROADWAY TYPICAL SECTION

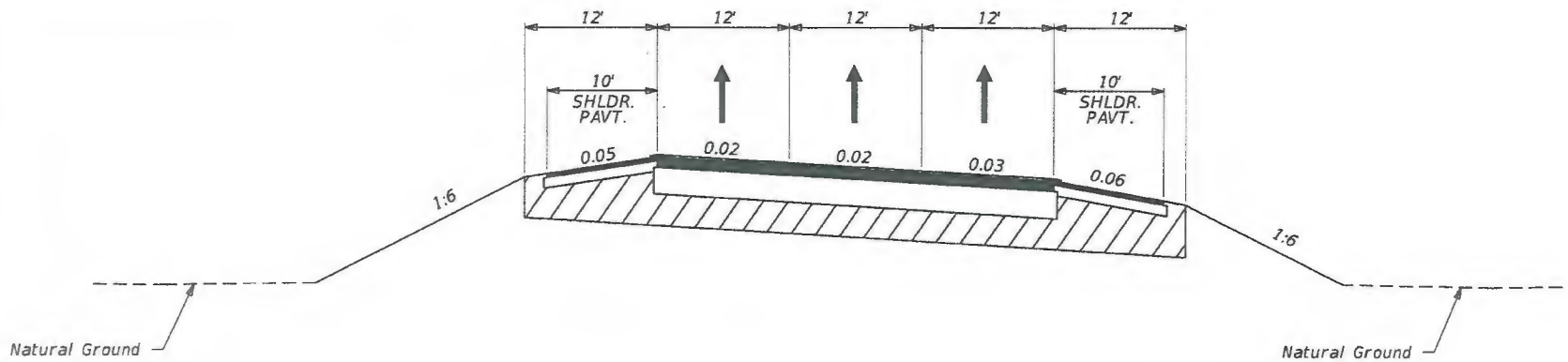

SR 400 (I-4)
THREE LANE RAMP

SHEET 2-7

APPROVED BY	FDOT CONCURRENCE	FHWA CONCURRENCE
ROBERT M. DENNEY, P.E. Date 10/26/16 Engineer of Record 58593 HNTB CORPORATION 610 CRESCENT EXEC. CT. SUITE 400 LAKE MARY, FL 32746 (407) 805-0355 CERT OF AUTH NO 6500	ANNETTE K. BRENNAN, P.E. FDOT District Design Engineer Date 12/29/16	FHWA Transportation Engineer Date 1/17/18

ROBERT M. DENNEY LICENSE No. 58593 STATE OF FLORIDA PROFESSIONAL ENGINEER

PROJECT IDENTIFICATION

FINANCIAL PROJECT ID 432100-1-22-01 FEDERAL AID PROJECT NO. N/A COUNTY NAME ORANGE

SECTION NO. 75280 ROAD DESIGNATION SR 400 (I-4) LIMITS/MILEPOST MP 0.000 - 9.528

PROJECT DESCRIPTION WIDENING SR 400 (I-4) FROM WEST OF CR 532 TO WEST OF SR 435 KIRKMAN ROAD AND FROM 1 MILE EAST OF SR 434 TO 1/2 MILE EAST OF SR 472.

Ramp	Design Speed
SEGMENT 2	
I-4 WB EXPRESS LANE TO SR 528 EB	50
I-4 EB EXPRESS LANE TO SR 528 EB	50

PROPOSED STRUCTURE TYPICAL SECTION

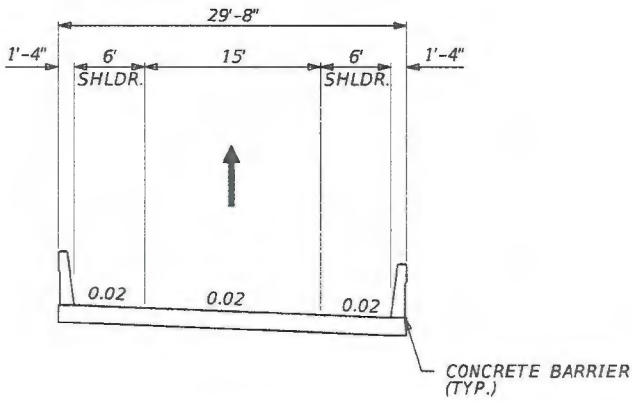

SR 400 (I-4)
ONE LANE BRIDGE RAMP

SHEET 2-8

APPROVED BY	FDOT CONCURRENCE	FHWA CONCURRENCE
ROBERT M. DENNEY, P.E. Date Engineer of Record 58593	ANNETTE K. BRENNAN, P.E. 12/29/16 Date FDOT District Design Engineer	FHWA Transportation Engineer 1/17/18 Date

HNTB CORPORATION
610 CRESCENT EXEC. CT.
SUITE 400
LAKE MARY, FL 32746
(407) 805-0355
CERT OF AUTH NO 6500

ROBERT M. DENNEY LICENSE No. 58593 STATE OF FLORIDA PROFESSIONAL ENGINEER

PROJECT IDENTIFICATION

FINANCIAL PROJECT ID 432100-1-22-01 FEDERAL AID PROJECT NO. N/A COUNTY NAME ORANGE

SECTION NO. 75280 ROAD DESIGNATION SR 400 (I-4) LIMITS/MILEPOST MP 0.000 - 9.528

PROJECT DESCRIPTION WIDENING SR 400 (I-4) FROM WEST OF CR 532 TO WEST OF SR 435 KIRKMAN ROAD AND FROM 1 MILE EAST OF SR 434 TO 1/2 MILE EAST OF SR 472.

Ramp	Design Speed
SEGMENT 2	
I-4 WB GUL TO SR 528 EB	50
SR 528 WB TO I-4 WB GUL	50

PROPOSED STRUCTURE TYPICAL SECTION

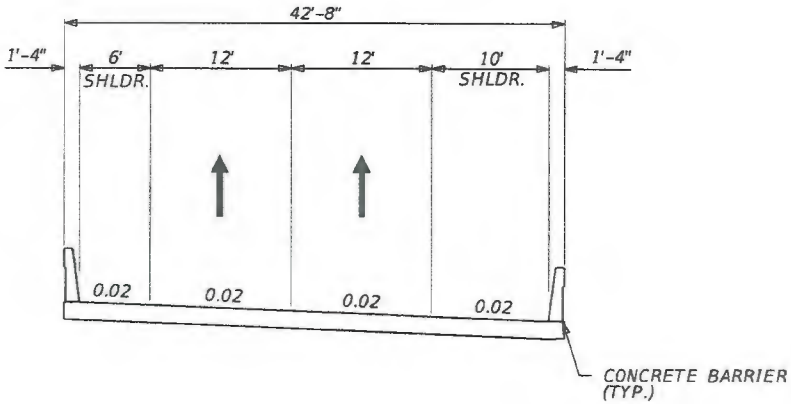

SR 400 (I-4)
TWO LANE BRIDGE RAMP

SHEET 2-9

APPROVED BY	FDOT CONCURRENCE	FHWA CONCURRENCE
ROBERT M. DENNEY, P.E. Date Engineer of Record 58593	ANNETTE K. BRENNAN, P.E. 12/29/16 Date FDOT District Design Engineer	FHWA Transportation Engineer 1/17/18 Date

HNTB CORPORATION
610 CRESCENT EXEC. CT.
SUITE 400
LAKE MARY, FL 32746
(407) 805-0355
CERT OF AUTH NO 6500

ROBERT M. DENNEY LICENSE No. 58593 STATE OF FLORIDA PROFESSIONAL ENGINEER

PROJECT IDENTIFICATION

FINANCIAL PROJECT ID 432100-1-22-01 FEDERAL AID PROJECT NO. N/A COUNTY NAME ORANGE

SECTION NO. 75280 ROAD DESIGNATION SR 400 (I-4) LIMITS/MILEPOST MP 0.000 - 9.528

PROJECT DESCRIPTION WIDENING SR 400 (I-4) FROM WEST OF CR 532 TO WEST OF SR 435 KIRKMAN ROAD AND FROM 1 MILE EAST OF SR 434 TO 1/2 MILE EAST OF SR 472.

Ramp	Design Speed
SEGMENT 2	
SR 528 WB GUL TO I-4 EB AND WB GUL	50
SAND LAKE RD TO I-4 EB GUL	50
SAND LAKE RD TO I-4 WB GUL	50

PROPOSED ROADWAY TYPICAL SECTION

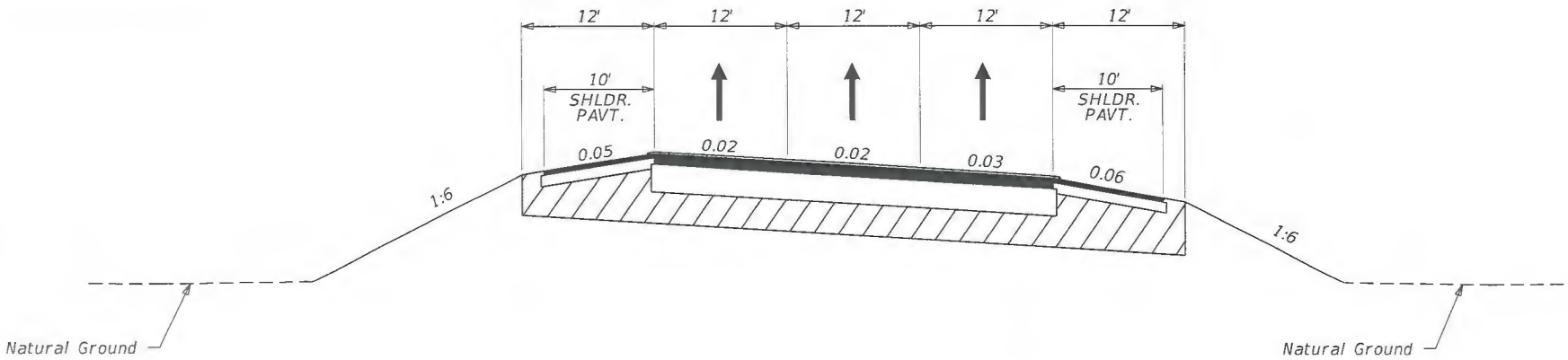

SR 400 (I-4)
THREE LANE RAMP

SHEET 2-10

APPROVED BY	FDOT CONCURRENCE	FHWA CONCURRENCE
ROBERT M. DENNEY, P.E. Date Engineer of Record 58593	ANNETTE K. BRENNAN, P.E. 3/17/17 Date FDOT District Design Engineer	FHWA Transportation Engineer 1/17/18 Date

HNTB CORPORATION
610 CRESCENT EXEC. CT.
SUITE 400
LAKE MARY, FL 32746
(407) 805-0355
CERT OF AUTH NO 6500

ROBERT M. DENNEY LICENSE No. 58593 STATE OF FLORIDA PROFESSIONAL ENGINEER

mbacal 2/9/2017 2:39:19 PM \\LKMw00\pmwork3\Jobs\59219 - I4 SAMR\TECHPROD\Typical Section Package\TYPDRD01-RAMPS.DGN

PROJECT IDENTIFICATION

FINANCIAL PROJECT ID 432100-1-22-01 FEDERAL AID PROJECT NO. N/A COUNTY NAME ORANGE

SECTION NO. 75280 ROAD DESIGNATION SR 400 (I-4) LIMITS/MILEPOST MP 0.000 - 9.528

PROJECT DESCRIPTION WIDENING SR 400 (I-4) FROM WEST OF CR 532 TO WEST OF SR 435 KIRKMAN ROAD AND FROM 1 MILE EAST OF SR 434 TO 1/2 MILE EAST OF SR 472.

Ramp	Design Speed
SEGMENT 2	
I-4 WB EXPRESS LANE TO SR 528 EB	50
I-4 EB EXPRESS LANE TO SR 528 EB	50

PROPOSED STRUCTURE TYPICAL SECTION

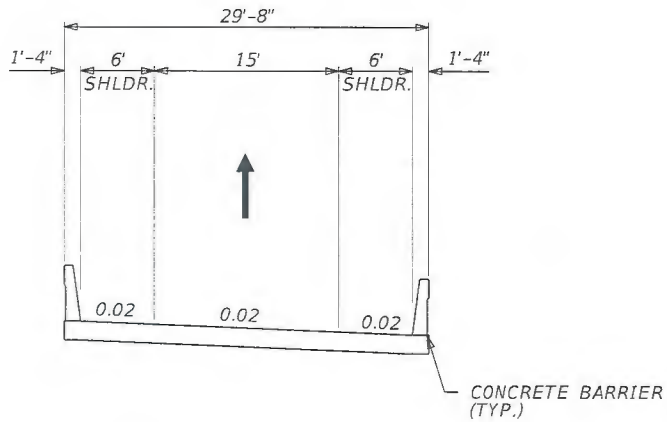

SR 400 (I-4)
ONE LANE BRIDGE RAMP

SHEET 2-11

APPROVED BY	FDOT CONCURRENCE	FHWA CONCURRENCE
ROBERT M. DENNEY, P.E. Engineer Of Record 58593 — Date 2/9/17 — HNTB CORPORATION, 610 CRESCENT EXEC. CT. SUITE 400, LAKE MARY, FL 32746, (407) 805-0355, CERT OF AUTH NO 6500	ANNETTE K. BRENNAN, P.E. FDOT District Design Engineer — Date 3/17/17	FHWA Transportation Engineer — Date 1/17/18

ROBERT M. DENNEY LICENSE No. 58593 STATE OF FLORIDA PROFESSIONAL ENGINEER

PROJECT IDENTIFICATION

FINANCIAL PROJECT ID 432100-1-22-01 FEDERAL AID PROJECT NO. N/A COUNTY NAME ORANGE

SECTION NO. 75280 ROAD DESIGNATION SR 400 (I-4) LIMITS/MILEPOST MP 0.000 - 9.528

PROJECT DESCRIPTION WIDENING SR 400 (I-4) FROM WEST OF CR 532 TO WEST OF SR 435 KIRKMAN ROAD AND FROM 1 MILE EAST OF SR 434 TO 1/2 MILE EAST OF SR 472.

Ramp	Design Speed
SEGMENT 2	
I-4 WB GUL TO SR 528 EB	50
SR 528 WB TO I-4 WB GUL	50

PROPOSED STRUCTURE TYPICAL SECTION

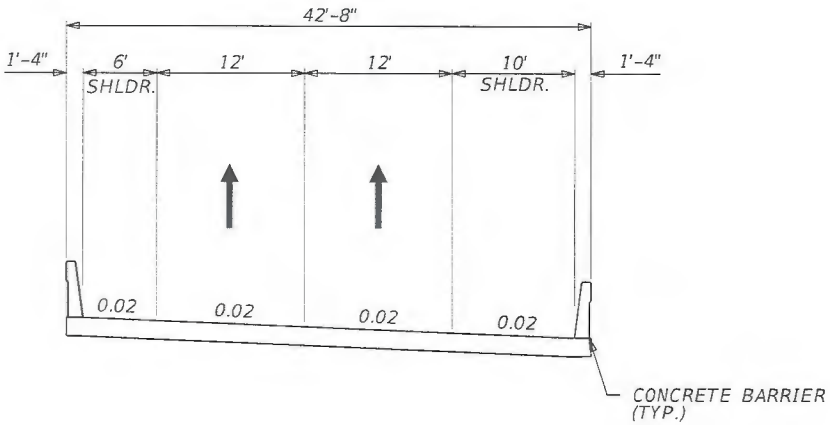

SR 400 (I-4)
TWO LANE BRIDGE RAMP

SHEET 2-12

APPROVED BY	FDOT CONCURRENCE	FHWA CONCURRENCE
ROBERT M. DENNEY, P.E. Engineer of Record 58593 — Date 2/9/17	ANNETTE K. BRENNAN, P.E. FDOT District Design Engineer — Date 3/17/17	FHWA Transportation Engineer — Date 1/12/18

ROBERT M. DENNEY LICENSE No. 58593 STATE OF FLORIDA PROFESSIONAL ENGINEER

HNTB CORPORATION
610 CRESCENT EXEC. CT.
SUITE 400
LAKE MARY, FL 32746
(407) 805-0355
CERT OF AUTH NO 6500

PROJECT IDENTIFICATION

FINANCIAL PROJECT ID: 432100-1-22-01 COUNTY (SECTION): ORANGE (75280)

PROJECT DESCRIPTION: WIDENING SR 400 (I-4) FROM WEST OF CR 532 TO WEST OF SR 435 (KIRKMAN RD.) AND FROM 1 MILE EAST OF SR 434 TO 1/2 MILE EAST OF SR 472.

PROJECT CONTROLS (SR 528)

FUNCTIONAL CLASSIFICATION

( ) RURAL
(X) URBAN

(X) FREEWAY/EXPWY. ( ) MAJOR COLL.
( ) PRINCIPAL ART. ( ) MINOR COLL.
( ) MINOR ART. ( ) LOCAL

HIGHWAY SYSTEM

Yes	No	
(X)	( )	NATIONAL HIGHWAY SYSTEM
( )	(X)	FLORIDA INTRASTATE HIGHWAY SYSTEM
(X)	( )	STRATEGIC INTERMODAL SYSTEM
(X)	( )	STATE HIGHWAY SYSTEM
( )	(X)	OFF STATE HIGHWAY SYSTEM

ACCESS CLASSIFICATION

(X) 1 - FREEWAY
( ) 2 - RESTRICTIVE w/Service Roads
( ) 3 - RESTRICTIVE w/660 ft. Connection Spacing
( ) 4 - NON-RESTRICTIVE w/2640 ft. Signal Spacing
( ) 5 - RESTRICTIVE w/440 ft. Connection Spacing
( ) 6 - NON-RESTRICTIVE w/1320 ft. Signal Spacing
( ) 7 - BOTH MEDIAN TYPES

TRAFFIC

	YEAR	AADT
OPENING	2020	99,000
INTERIM	2030	118,000
DESIGN	2040	136,000

DESIGN SPEED 70 MPH
POSTED SPEED 65 MPH

DISTRIBUTION

K	7.7
D	53.66
T_{24}	12.2%

CRITERIA

(X) NEW CONSTRUCTION / RECONSTRUCTION
( ) RRR INTERSTATE / FREEWAY
( ) RRR NON-INTERSTATE / FREEWAY
( ) TDLC / NEW CONSTRUCTION / RECONSTRUCTION
( ) TDLC / RRR
( ) MANUAL OF UNIFORM MINIMUM STANDARDS (FLORIDA GREENBOOK) (OFF-STATE HIGHWAY SYSTEM ONLY)

DESIGN SPEED APPROVALS

AK Brennan — 3/17/17
DISTRICT DESIGN ENGINEER — DATE

James Stutzman Jr. — 4/10/17
DISTRICT TRAFFIC OPERATIONS ENGINEER — DATE

LIST ANY POTENTIAL EXCEPTIONS AND VARIATIONS RELATED TO TYPICAL SECTION ELEMENTS:

N/A

LIST MAJOR STRUCTURES LOCATION/DESCRIPTION - REQUIRING INDEPENDENT STRUCTURE DESIGN:

SR 528 (750087, 750180)
WEST ENTRANCE DRIVE (754128)

LIST MAJOR UTILITIES WITHIN PROJECT CORRIDOR:
GAS (CENTRAL FLORIDA GAS)
WATER (ORANGE COUNTY UTILITIES)
COMMUNICATIONS (BRIGHTHOUSE NETWORKS, COMCAST, LEVEL 3, VERIZON)
WASTEWATER (ORANGE COUNTY UTILITIES)
ELECTRIC (DUKE ENERGY DISTRIBUTION, DUKE ENERGY TRANSMISSION)

LIST OTHER INFORMATION PERTINENT TO DESIGN OF PROJECT:

N/A

PROJECT IDENTIFICATION

FINANCIAL PROJECT ID 432100-1-22-01 FEDERAL AID PROJECT NO. N/A COUNTY NAME ORANGE

SECTION NO. 75280 ROAD DESIGNATION SR 400 (I-4) LIMITS/MILEPOST MP 0.000 - 9.528

PROJECT DESCRIPTION WIDENING SR 400 (I-4) FROM WEST OF CR 532 TO WEST OF SR 435 KIRKMAN ROAD AND FROM 1 MILE EAST OF SR 434 TO 1/2 MILE EAST OF SR 472.

PROPOSED ROADWAY TYPICAL SECTION

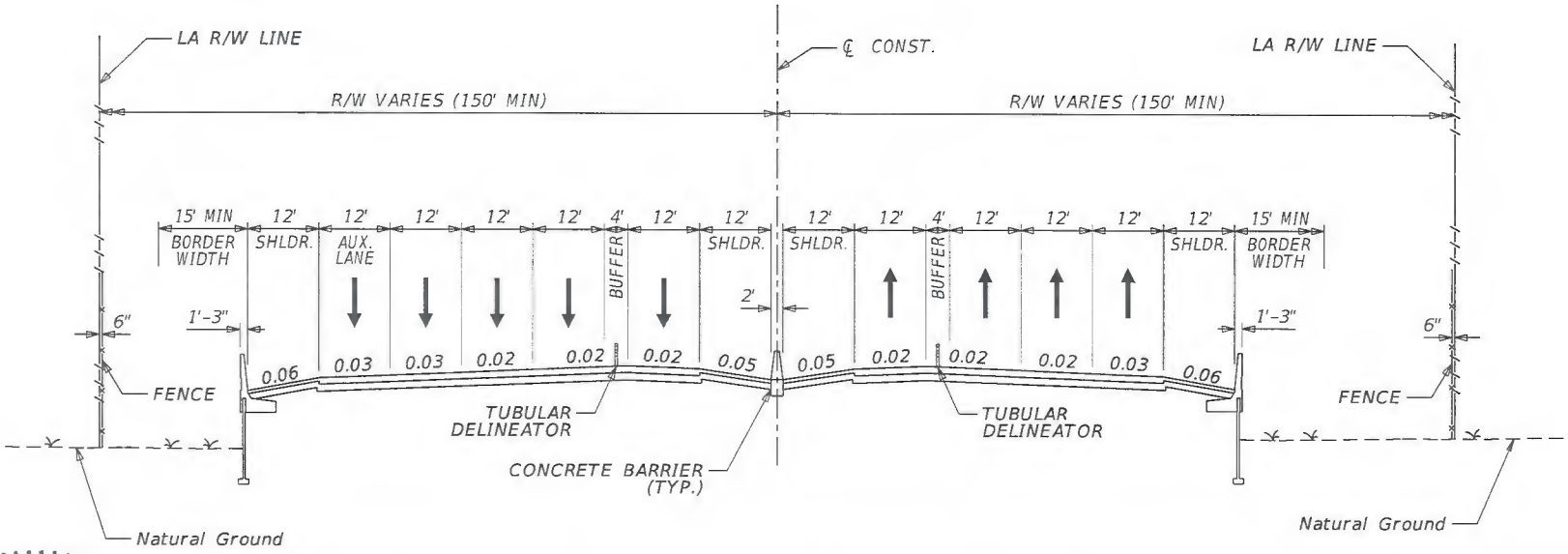

DESIGN SPEED = 70 MPH

SR 528 ROADWAY SECTION (1 EXPRESS LANE BOTH DIRECTIONS)

SHEET 2-14

APPROVED BY	FDOT CONCURRENCE	FHWA CONCURRENCE
ROBERT M. DENNEY, P.E. Date Engineer Of Record 58593	ANNETTE K. BRENNAN, P.E. FDOT District Design Engineer 3/17/17 Date	FHWA Transportation Engineer 1/17/18 Date

HNTB CORPORATION
610 CRESCENT EXEC. CT.
SUITE 400
LAKE MARY, FL 32746
(407) 805-0355
CERT OF AUTH NO 6500

ROBERT M. DENNEY LICENSE No. 58593 STATE OF FLORIDA PROFESSIONAL ENGINEER

PROJECT IDENTIFICATION

FINANCIAL PROJECT ID 432100-1-22-01 FEDERAL AID PROJECT NO. N/A COUNTY NAME ORANGE

SECTION NO. 75280 ROAD DESIGNATION SR 400 (I-4) LIMITS/MILEPOST MP 0.000 - 9.528

PROJECT DESCRIPTION WIDENING SR 400 (I-4) FROM WEST OF CR 532 TO WEST OF SR 435 KIRKMAN ROAD AND FROM 1 MILE EAST OF SR 434 TO 1/2 MILE EAST OF SR 472.

PROPOSED ROADWAY TYPICAL SECTION

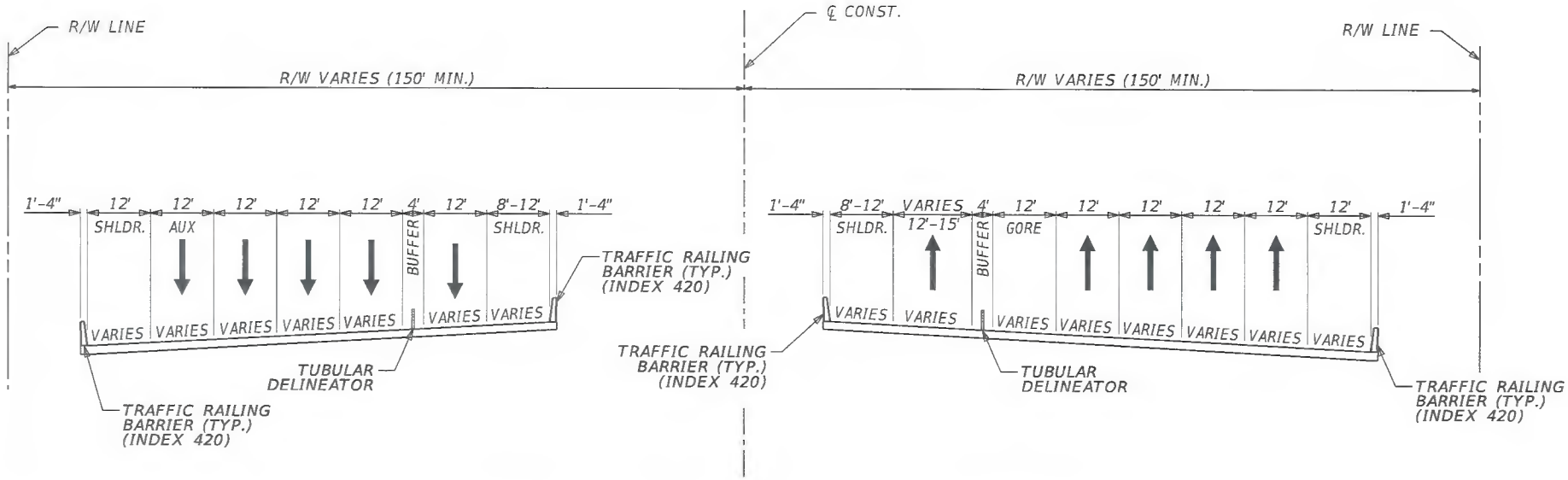

DESIGN SPEED = 70 MPH

SR 528 BRIDGE SECTION OVER WEST ENTRANCE ROAD

SHEET 2-15

APPROVED BY	FDOT CONCURRENCE	FHWA CONCURRENCE
ROBERT M. DENNEY, P.E. Date Engineer of Record 58593 HNTB CORPORATION 610 CRESCENT EXEC. CT. SUITE 400 LAKE MARY, FL 32746 (407) 805-0355 CERT OF AUTH NO 6500	ANNETTE K. BRENNAN, P.E. 3/17/17 Date FDOT District Design Engineer	FHWA Transportation Engineer Date

ROBERT M. DENNEY LICENSED No. 58593 STATE OF FLORIDA PROFESSIONAL ENGINEER

mbacal 2/9/2017 2:39:21 PM \\LKMw00\pmwork3\Jobs\59219 - I4 SAMR\TECHPROD\Typical Section Package\TYPDRD01-SEG-2.DGN

PROJECT IDENTIFICATION

FINANCIAL PROJECT ID: 432100-1-22-01 COUNTY (SECTION): ORANGE (75280)

PROJECT DESCRIPTION: WIDENING SR 400 (I-4) FROM WEST OF CR 532 TO WEST OF SR 435 (KIRKMAN RD.) AND FROM 1 MILE EAST OF SR 434 TO 1/2 MILE EAST OF SR 472.

PROJECT CONTROLS (SR 482/SAND LAKE ROAD)

FUNCTIONAL CLASSIFICATION

( ) RURAL
(X) URBAN

( ) FREEWAY/EXPWY. (X) MAJOR COLL.
( ) PRINCIPAL ART. ( ) MINOR COLL.
( ) MINOR ART. ( ) LOCAL

HIGHWAY SYSTEM

Yes	No	
(X)	( )	NATIONAL HIGHWAY SYSTEM
( )	(X)	FLORIDA INTRASTATE HIGHWAY SYSTEM
( )	(X)	STRATEGIC INTERMODAL SYSTEM
(X)	( )	STATE HIGHWAY SYSTEM
( )	(X)	OFF STATE HIGHWAY SYSTEM

ACCESS CLASSIFICATION

( ) 1 - FREEWAY
( ) 2 - RESTRICTIVE w/Service Roads
( ) 3 - RESTRICTIVE w/660 ft. Connection Spacing
( ) 4 - NON-RESTRICTIVE w/2640 ft. Signal Spacing
(X) 5 - RESTRICTIVE w/440 ft. Connection Spacing
( ) 6 - NON-RESTRICTIVE w/1320 ft. Signal Spacing
( ) 7 - BOTH MEDIAN TYPES

TRAFFIC

	YEAR	AADT
OPENING	2020	59,000
INTERIM	2030	63,000
DESIGN	2040	69,000

DESIGN SPEED 40 MPH
POSTED SPEED 40 MPH

DISTRIBUTION
K 7.4
D 53.66
T_{24} 6.9%

CRITERIA

(X) NEW CONSTRUCTION / RECONSTRUCTION
( ) RRR INTERSTATE / FREEWAY
( ) RRR NON-INTERSTATE / FREEWAY
( ) TDLC / NEW CONSTRUCTION / RECONSTRUCTION
( ) TDLC / RRR
( ) MANUAL OF UNIFORM MINIMUM STANDARDS (FLORIDA GREENBOOK) (OFF-STATE HIGHWAY SYSTEM ONLY)

DESIGN SPEED APPROVALS

AK Brennan — 3/17/17
DISTRICT DESIGN ENGINEER — DATE

4/10/17
DISTRICT TRAFFIC OPERATIONS ENGINEER — DATE

LIST ANY POTENTIAL EXCEPTIONS AND VARIATIONS RELATED TO TYPICAL SECTION ELEMENTS:

N/A

LIST MAJOR STRUCTURES LOCATION/DESCRIPTION - REQUIRING INDEPENDENT STRUCTURE DESIGN:

SAND LAKE ROAD (750335, 750336)

LIST MAJOR UTILITIES WITHIN PROJECT CORRIDOR:
GAS (CENTRAL FLORIDA GAS)
WATER (ORANGE COUNTY UTILITIES)
COMMUNICATIONS (BRIGHTHOUSE NETWORKS, COMCAST, LEVEL 3, VERIZON)
WASTEWATER (ORANGE COUNTY UTILITIES)
ELECTRIC (DUKE ENERGY DISTRIBUTION, DUKE ENERGY TRANSMISSION)

LIST OTHER INFORMATION PERTINENT TO DESIGN OF PROJECT:

N/A

PROJECT IDENTIFICATION

FINANCIAL PROJECT ID 432100-1-22-01 FEDERAL AID PROJECT NO. N/A COUNTY NAME ORANGE

SECTION NO. 75280 ROAD DESIGNATION SR 400 (I-4) LIMITS/MILEPOST MP 0.000 - 9.528

PROJECT DESCRIPTION WIDENING SR 400 (I-4) FROM WEST OF CR 532 TO WEST OF SR 435 KIRKMAN ROAD AND FROM 1 MILE EAST OF SR 434 TO 1/2 MILE EAST OF SR 472.

PROPOSED ROADWAY TYPICAL SECTION

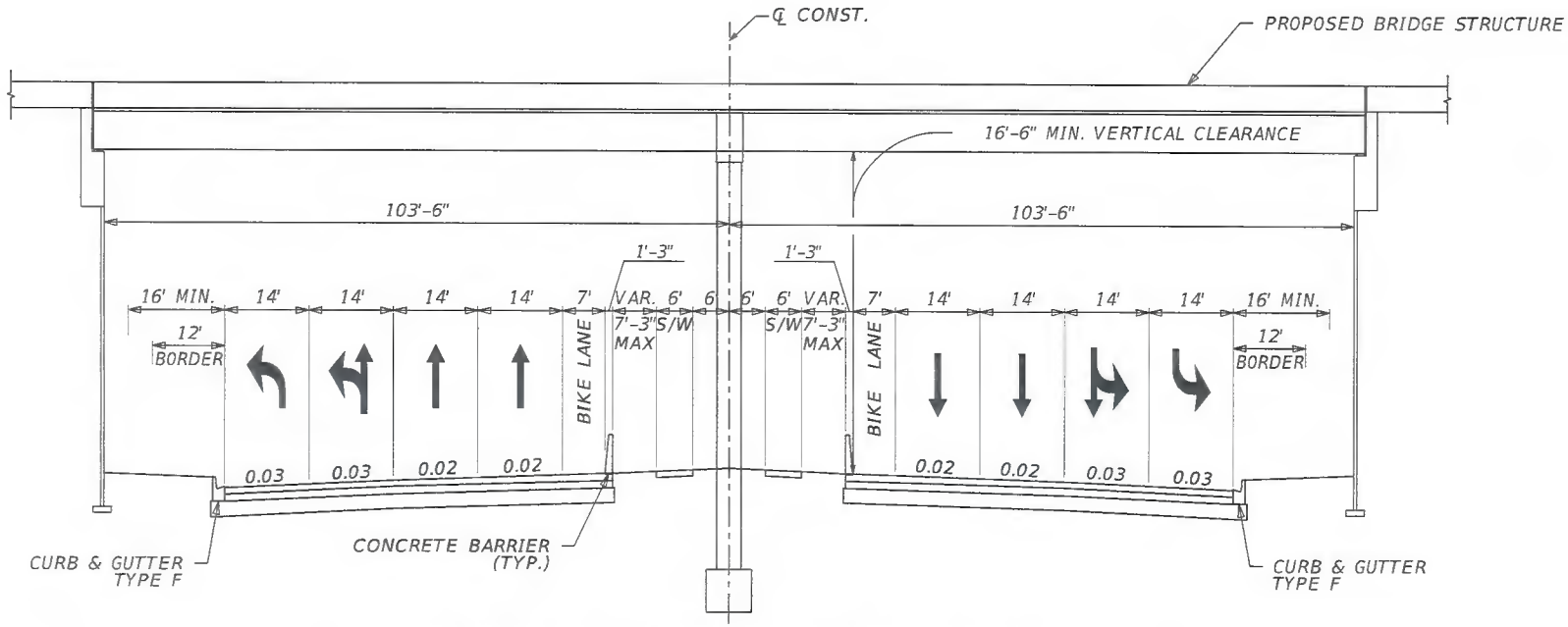

SR 482 (SAND LAKE RD) ROADWAY SECTION
DIVERGING DIAMOND INTERCHANGE

SHEET 2-17

APPROVED BY	FDOT CONCURRENCE	FHWA CONCURRENCE
ROBERT M. DENNEY, P.E. Date Engineer Of Record 58593	ANNETTE K. BRENNAN, P.E. Date FDOT District Design Engineer	FHWA Transportation Engineer Date

HNTB CORPORATION
610 CRESCENT EXEC. CT.
SUITE 400
LAKE MARY, FL 32746
(407) 805-0355
CERT OF AUTH NO 6500

ROBERT M. DENNEY LICENSE No. 58593 STATE OF FLORIDA PROFESSIONAL ENGINEER

mbacal 2/9/2017 2:39:22 PM \\LKMw00\pmwork3\Jobs\59219 - I4 SAMR\TECHPROD\Typical Section Package\TYPDRD01-SEG-2.DGN

PROJECT IDENTIFICATION

FINANCIAL PROJECT ID 432100-1-22-01 FEDERAL AID PROJECT NO. N/A COUNTY NAME ORANGE

SECTION NO. 75280 ROAD DESIGNATION SR 400 (I-4) LIMITS/MILEPOST MP 0.000 - 9.528

PROJECT DESCRIPTION WIDENING SR 400 (I-4) FROM WEST OF CR 532 TO WEST OF SR 435 KIRKMAN ROAD AND FROM 1 MILE EAST OF SR 434 TO 1/2 MILE EAST OF SR 472.

PROPOSED ROADWAY TYPICAL SECTION

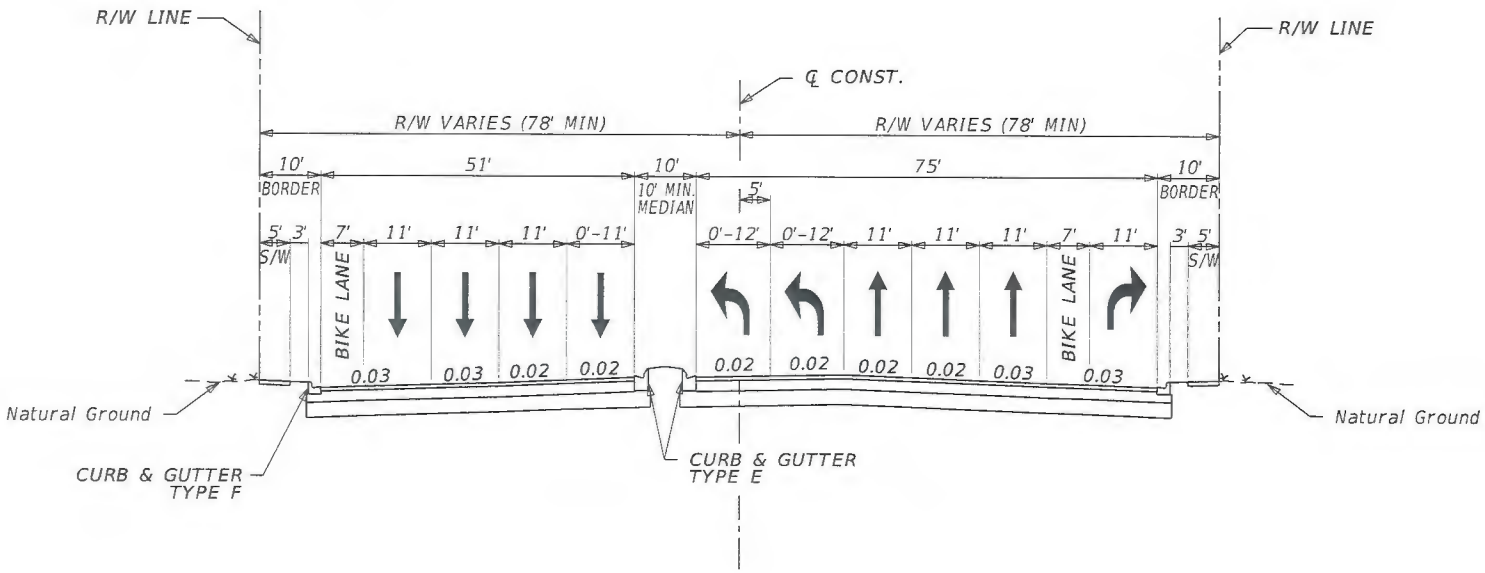

DESIGN SPEED = 40 MPH
SAND LAKE RD ROADWAY SECTION
(EAST OF SR 400)

SHEET 2-18

APPROVED BY	FDOT CONCURRENCE	FHWA CONCURRENCE
ROBERT M. DENNEY, P.E. Date Engineer of Record 58503	ANNETTE K. BRENNAN, P.E. FDOT District Design Engineer Date 3/17/17	FHWA Transportation Engineer Date

HNTB CORPORATION
610 CRESCENT EXEC. CT.
SUITE 400
LAKE MARY, FL 32746
(407) 805-0355
CERT OF AUTH NO 6500

ROBERT M. DENNEY LICENSE No. 58503 STATE OF FLORIDA PROFESSIONAL ENGINEER

mbacal 2/22/2017 2:39:23 PM \\LKMw00\pmwork3\Jobs\59219 - I4 SAMR\TECHPROD\Typical Section Package\TYPDRD01-SEG-2.DGN

PROJECT IDENTIFICATION

FINANCIAL PROJECT ID: 432100-1-22-01 COUNTY (SECTION): ORANGE (75280)

PROJECT DESCRIPTION: WIDENING SR 400 (I-4) FROM WEST OF CR 532 TO WEST OF SR 435 (KIRKMAN RD.) AND FROM 1 MILE EAST OF SR 434 TO 1/2 MILE EAST OF SR 472.

PROJECT CONTROLS (TURKEY LAKE ROAD)

FUNCTIONAL CLASSIFICATION

( ) RURAL
(X) URBAN

( ) FREEWAY/EXPWY. ( ) MAJOR COLL.
( ) PRINCIPAL ART. ( ) MINOR COLL.
(X) MINOR ART. ( ) LOCAL

HIGHWAY SYSTEM

Yes	No	
( )	(X)	NATIONAL HIGHWAY SYSTEM
( )	(X)	FLORIDA INTRASTATE HIGHWAY SYSTEM
( )	(X)	STRATEGIC INTERMODAL SYSTEM
( )	(X)	STATE HIGHWAY SYSTEM
(X)	( )	OFF STATE HIGHWAY SYSTEM

ACCESS CLASSIFICATION

( ) 1 - FREEWAY
( ) 2 - RESTRICTIVE w/Service Roads
( ) 3 - RESTRICTIVE w/660 ft. Connection Spacing
( ) 4 - NON-RESTRICTIVE w/2640 ft. Signal Spacing
(X) 5 - RESTRICTIVE w/440 ft. Connection Spacing
( ) 6 - NON-RESTRICTIVE w/1320 ft. Signal Spacing
( ) 7 - BOTH MEDIAN TYPES

TRAFFIC

	YEAR	AADT
OPENING	2020	32,000
INTERIM	2030	38,000
DESIGN	2040	41,000

DESIGN SPEED 45 MPH
POSTED SPEED 45 MPH

DISTRIBUTION

K	7.4
D	53.66
T_{24}	3.8%

CRITERIA

(X) NEW CONSTRUCTION / RECONSTRUCTION
( ) RRR INTERSTATE / FREEWAY
( ) RRR NON-INTERSTATE / FREEWAY
( ) TDLC / NEW CONSTRUCTION / RECONSTRUCTION
( ) TDLC / RRR
( ) MANUAL OF UNIFORM MINIMUM STANDARDS (FLORIDA GREENBOOK) (OFF-STATE HIGHWAY SYSTEM ONLY)

DESIGN SPEED APPROVALS

AK Brennan — 3/17/17
DISTRICT DESIGN ENGINEER — DATE

James Stitz Jr — 4/10/17
DISTRICT TRAFFIC OPERATIONS ENGINEER — DATE

LIST ANY POTENTIAL EXCEPTIONS AND VARIATIONS RELATED TO TYPICAL SECTION ELEMENTS:

N/A

LIST MAJOR STRUCTURES LOCATION/DESCRIPTION - REQUIRING INDEPENDENT STRUCTURE DESIGN:

N/A

LIST MAJOR UTILITIES WITHIN PROJECT CORRIDOR:
GAS (CENTRAL FLORIDA GAS)
WATER (ORANGE COUNTY UTILITIES)
COMMUNICATIONS (BRIGHTHOUSE NETWORKS, COMCAST, LEVEL 3, VERIZON)
WASTEWATER (ORANGE COUNTY UTILITIES)
ELECTRIC (DUKE ENERGY DISTRIBUTION, DUKE ENERGY TRANSMISSION)

LIST OTHER INFORMATION PERTINENT TO DESIGN OF PROJECT:

N/A

PROJECT IDENTIFICATION

FINANCIAL PROJECT ID 432100-1-22-01 FEDERAL AID PROJECT NO. N/A COUNTY NAME ORANGE

SECTION NO. 75280 ROAD DESIGNATION SR 400 (I-4) LIMITS/MILEPOST MP 0.000 - 9.528

PROJECT DESCRIPTION WIDENING SR 400 (I-4) FROM WEST OF CR 532 TO WEST OF SR 435 KIRKMAN ROAD AND FROM 1 MILE EAST OF SR 434 TO 1/2 MILE EAST OF SR 472.

PROPOSED ROADWAY TYPICAL SECTION

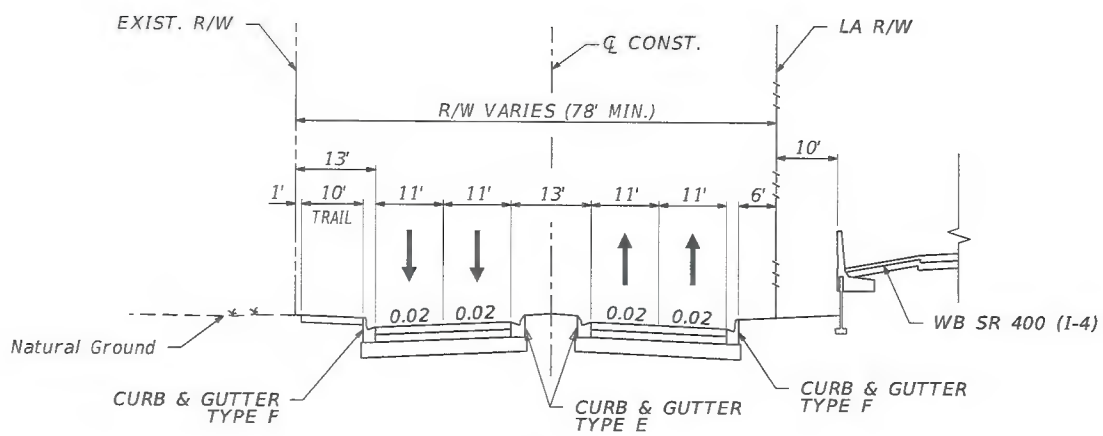

DESIGN SPEED = 45 MPH
TURKEY LAKE RD ROADWAY SECTION
(NEAR SR 528)

SHEET 2-20

APPROVED BY	FDOT CONCURRENCE	FHWA CONCURRENCE	COUNTY CONCURRENCE
ROBERT M. DENNEY, P.E. Engineer of Record 58593 — Date 2/9/17	ANNETTE K. BRENNAN, P.E. FDOT District Design Engineer — Date 3/17/17	FHWA Transportation Engineer — Date	County Engineer — Date 8-14-17

HNTB CORPORATION
610 CRESCENT EXEC. CT.
SUITE 400
LAKE MARY, FL 32746
(407) 805-0355
CERT OF AUTH NO 6500

ROBERT M. DENNEY LICENSE No. 58593 STATE OF FLORIDA PROFESSIONAL ENGINEER

mbacal 2/9/2017 2:39:24 PM \\LKMw00\pmwork3\Jobs\59219 - I4 SAMR\TECHPROD\Typical Section Package\TYPDRD01-SEG-2.DGN

PROJECT IDENTIFICATION

FINANCIAL PROJECT ID 432100-1-22-01 FEDERAL AID PROJECT NO. N/A COUNTY NAME ORANGE

SECTION NO. 75280 ROAD DESIGNATION SR 400 (I-4) LIMITS/MILEPOST MP 0.000 - 9.528

PROJECT DESCRIPTION WIDENING SR 400 (I-4) FROM WEST OF CR 532 TO WEST OF SR 435 KIRKMAN ROAD AND FROM 1 MILE EAST OF SR 434 TO 1/2 MILE EAST OF SR 472.

PROPOSED ROADWAY TYPICAL SECTION

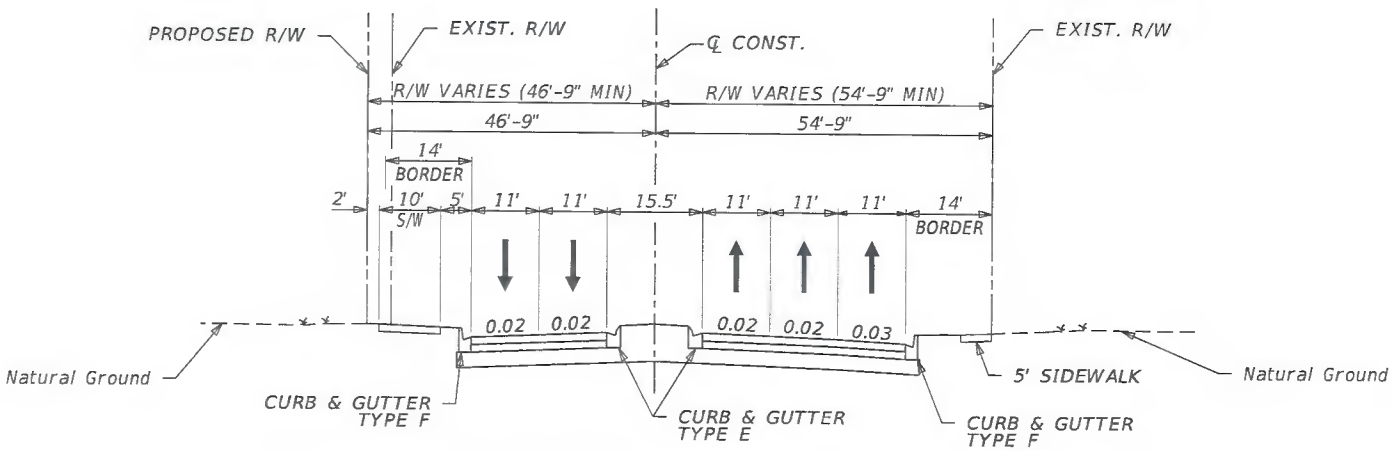

DESIGN SPEED = 45 MPH
TURKEY LAKE RD ROADWAY SECTION
(NEAR SAND LAKE RD)

SHEET 2-21

APPROVED BY	FDOT CONCURRENCE	FHWA CONCURRENCE	COUNTY CONCURRENCE
STATE OF FLORIDA ROBERT M. DENNEY, P.E. Engineer Of Record 58593 — Date 2/9/17	ANNETTE K. BRENNAN, P.E. FDOT District Design Engineer — Date 3/17/17	FHWA Transportation Engineer — Date	County Engineer — Date 8-17-17

HNTB CORPORATION
610 CRESCENT EXEC. CT.
SUITE 400
LAKE MARY, FL 32746
(407) 805-0355
CERT OF AUTH NO 6500

ROBERT M. DENNEY No. 58593 STATE OF FLORIDA PROFESSIONAL ENGINEER

PROJECT IDENTIFICATION

FINANCIAL PROJECT ID 432100-1-22-01 FEDERAL AID PROJECT NO. N/A COUNTY NAME ORANGE

SECTION NO. 75280 ROAD DESIGNATION SR 400 (I-4) LIMITS/MILEPOST MP 0.000 - 9.528

PROJECT DESCRIPTION WIDENING SR 400 (I-4) FROM WEST OF CR 532 TO WEST OF SR 435 KIRKMAN ROAD AND FROM 1 MILE EAST OF SR 434 TO 1/2 MILE EAST OF SR 472.

PROPOSED ROADWAY TYPICAL SECTION

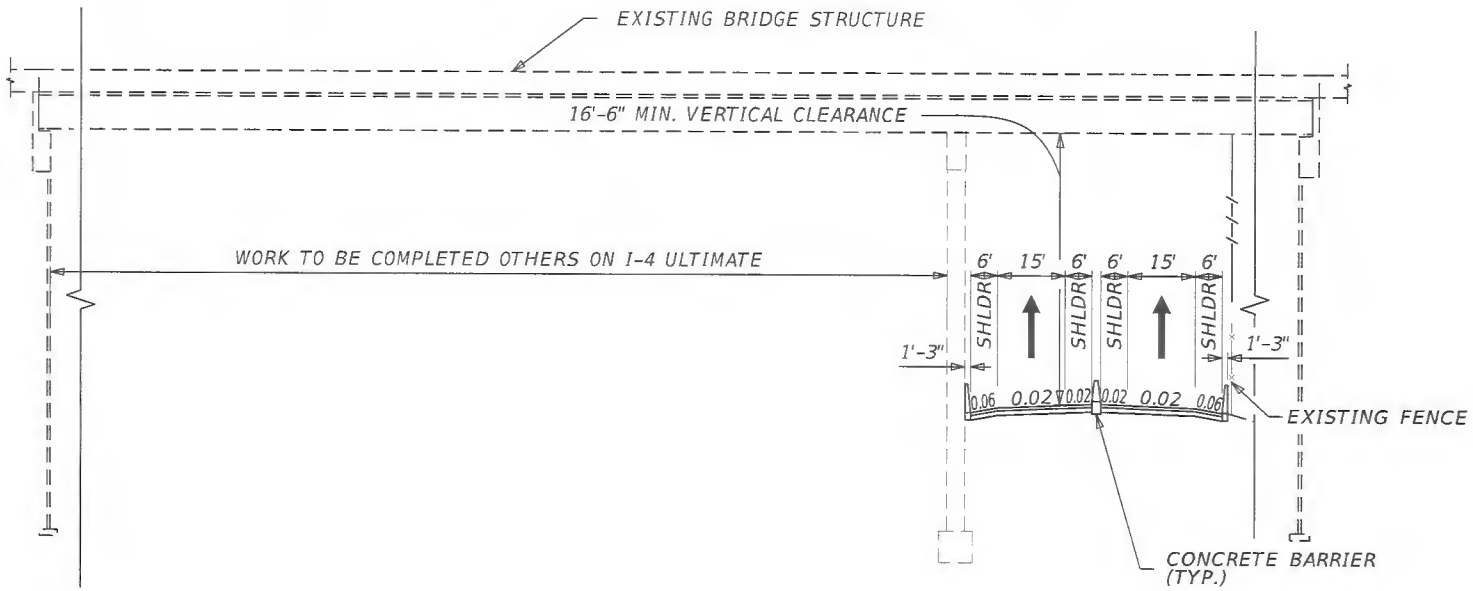

DESIGN SPEED = 50 MPH

WB SR 400 (I-4) UNDER UNIVERSAL BLVD

SHEET 2-22

APPROVED BY	FDOT CONCURRENCE	FHWA CONCURRENCE
ROBERT M. DENNEY, P.E. Date Engineer of Record 58593 HNTB CORPORATION 610 CRESCENT EXEC. CT. SUITE 400 LAKE MARY, FL 32746 (407) 805-0355 CERT OF AUTH NO 6500	ANNETTE K. BRENNAN, P.E. FDOT District Design Engineer Date 3/17/17	FHWA Transportation Engineer Date

ROBERT M. DENNEY LICENSE No. 58593 STATE OF FLORIDA PROFESSIONAL ENGINEER

STATE OF FLORIDA

DEPARTMENT OF TRANSPORTATION

FINANCIAL PROJECT ID 201210-2-22-01
(FEDERAL FUNDS)

N

0 3 6

Miles

POLK COUNTY (16320)

STATE ROAD NO. 400 (I-4)
I-4 BEYOND THE ULTIMATE
TYPICAL SECTION PACKAGE

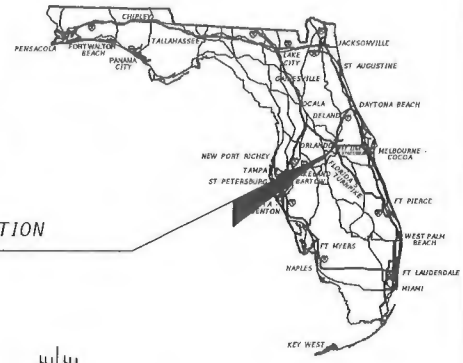

PROJECT LOCATION

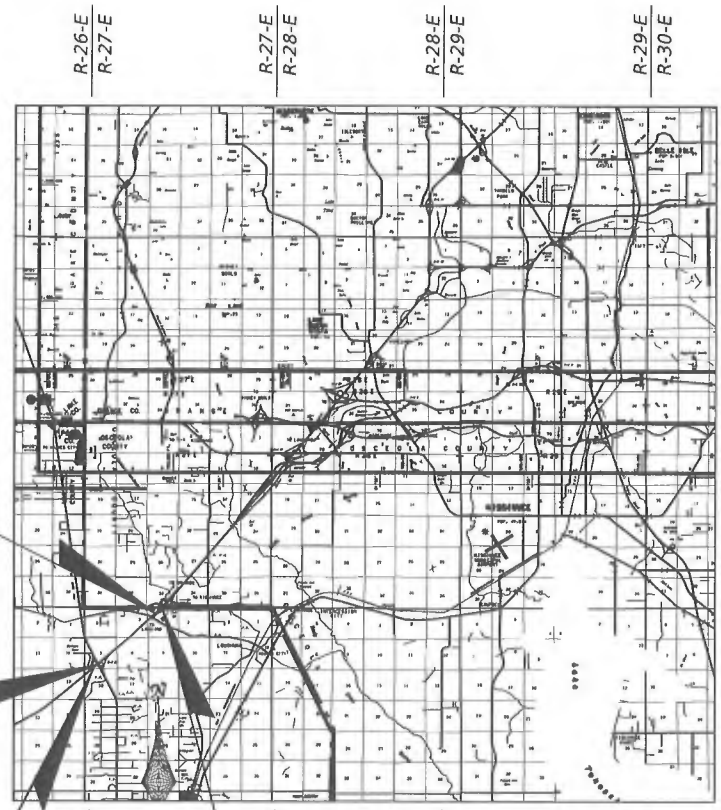

END SEGMENT 5
℄ EXIST. SR 400
STA. 604+50.00
MP 31.607 (POLK CO.)

US 27

BEGIN PROJECT
BEGIN SEGMENT 5
℄ EXIST. SR 400
STA. 368+58.00
MP 27.145 (POLK CO.)

POLK / OSCEOLA CO. DIVIDE
MP 32.022 / 0.000

PROJECT LENGTH IS BASED ON ℄ OF CONSTRUCTION

LENGTH OF PROJECT		
	LINEAR FEET	MILES
ROADWAY	23591.04	4.468
BRIDGES	0.000	0.000
NET LENGTH OF PROJECT	23591.04	4.468
EXCEPTIONS	--	--
GROSS LENGTH OF PROJECT	23591.04	4.468

FDOT PROJECT MANAGER: BEATA STYŚ-PALASZ, PE

SHEET 5-1

PROJECT IDENTIFICATION

FINANCIAL PROJECT ID: 201210-2-22-01 COUNTY (SECTION): POLK (16320)

PROJECT DESCRIPTION: WIDENING SR 400 (I-4) FROM WEST OF US 27/SR 25 TO WEST OF CR 532

PROJECT CONTROLS (SR 400/I-4)

FUNCTIONAL CLASSIFICATION

( ) RURAL
(X) URBAN

( ) FREEWAY/EXPWY. ( ) MAJOR COLL.
(X) PRINCIPAL ART. ( ) MINOR COLL.
( ) MINOR ART. ( ) LOCAL

HIGHWAY SYSTEM

Yes	No	
(X)	( )	NATIONAL HIGHWAY SYSTEM
( )	(X)	FLORIDA INTRASTATE HIGHWAY SYSTEM
(X)	( )	STRATEGIC INTERMODAL SYSTEM
(X)	( )	STATE HIGHWAY SYSTEM
( )	(X)	OFF STATE HIGHWAY SYSTEM

ACCESS CLASSIFICATION

(X) 1 - FREEWAY
( ) 2 - RESTRICTIVE w/Service Roads
( ) 3 - RESTRICTIVE w/660 ft. Connection Spacing
( ) 4 - NON-RESTRICTIVE w/2640 ft. Signal Spacing
( ) 5 - RESTRICTIVE w/440 ft. Connection Spacing
( ) 6 - NON-RESTRICTIVE w/1320 ft. Signal Spacing
( ) 7 - BOTH MEDIAN TYPES

TRAFFIC

	YEAR	AADT
OPENING	2020	140,000
INTERIM	2030	170,000
DESIGN	2040	199,000

DESIGN SPEED 70 MPH
POSTED SPEED 70 MPH

DISTRIBUTION

K	7.4
D	52.92
T_{24}	12.7%

CRITERIA

(X) NEW CONSTRUCTION / RECONSTRUCTION
( ) RRR INTERSTATE / FREEWAY
( ) RRR NON-INTERSTATE / FREEWAY
( ) TDLC / NEW CONSTRUCTION / RECONSTRUCTION
( ) TDLC / RRR
( ) MANUAL OF UNIFORM MINIMUM STANDARDS (FLORIDA GREENBOOK) (OFF-STATE HIGHWAY SYSTEM ONLY)

DESIGN SPEED APPROVALS

D.A. Wasing — 8-16-17
DISTRICT DESIGN ENGINEER — DATE

Keith Slater — 8-16-17
DISTRICT TRAFFIC OPERATIONS ENGINEER — DATE

LIST ANY POTENTIAL EXCEPTIONS AND VARIATIONS RELATED TO TYPICAL SECTION ELEMENTS:

BORDER WIDTH (VARIATION) - FOR THE BORDER WIDTHS LESS THAN 94-FT (94-FT REQUIRED)

LIST MAJOR STRUCTURES LOCATION/DESCRIPTION - REQUIRING INDEPENDENT STRUCTURE DESIGN:

US 27/SR 25 (160320)
GRANDVIEW PARKWAY (924179) (BY OTHERS)
CR 54 (160331, 160332)

LIST MAJOR UTILITIES WITHIN PROJECT CORRIDOR:

GAS (CENTRAL FLORIDA GAS)
WATER (POLK COUNTY UTILITIES)
COMMUNICATIONS (BRIGHTHOUSE NETWORKS, COMCAST, LEVEL 3, VERIZON)
WASTEWATER (POLK COUNTY UTILITIES)
ELECTRIC (DUKE ENERGY DISTRIBUTION, DUKE ENERGY TRANSMISSION)

LIST OTHER INFORMATION PERTINENT TO DESIGN OF PROJECT:

THE PROJECT IS BEING DESIGNED UNDER CONTRACT WITH DISTRICT 5

PROJECT IDENTIFICATION

FINANCIAL PROJECT ID 201210-2-22-01 FEDERAL AID PROJECT NO. N/A COUNTY NAME POLK

SECTION NO. 16320 ROAD DESIGNATION SR 400 (I-4) LIMITS/MILEPOST MP 27.145 - 32.022

PROJECT DESCRIPTION WIDENING SR 400 (I-4) FROM WEST OF SR 25/US 27 TO WEST OF CR 532

PROPOSED ROADWAY TYPICAL SECTION

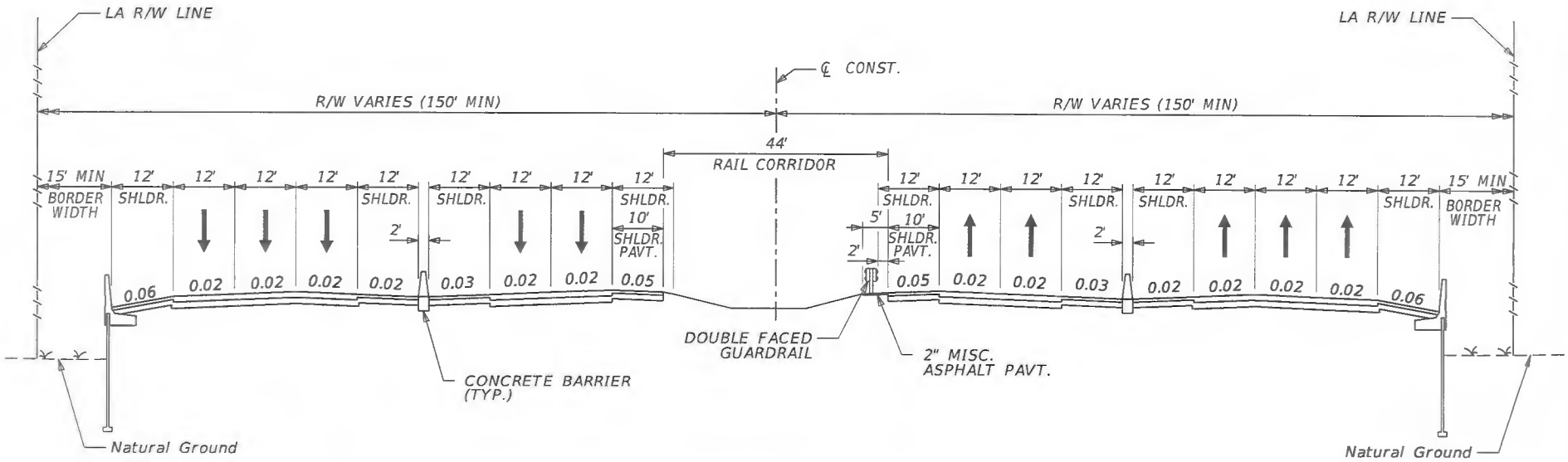

SR 400 (I-4) WITH RAIL CORRIDOR
STA 368+58.00 TO STA 627+20.00

SHEET 5-3

APPROVED BY	FDOT CONCURRENCE	FHWA CONCURRENCE
ROBERT M. DENNEY, P.E. Engineer Of Record 58593 2/9/17 Date	B.A. Masing BERNIE MASING, P.E. FDOT District Design Engineer 8-16-17 Date	FHWA Transportation Engineer 1/17/18 Date

HNTB CORPORATION
610 CRESCENT EXEC. CT.
SUITE 400
LAKE MARY, FL 32746
(407) 805-0355
CERT OF AUTH NO 6500

ROBERT M. DENNEY LICENSE No. 58593 STATE OF FLORIDA PROFESSIONAL ENGINEER

mbacat 2/9/2017 2:38:06 PM \\LKMw00\pmwork3\Jobs\59219 - I4 SAMR\TECHPROD\Typical Section Package\TYPDRD01-I-4 TYPICALS.DGN

PROJECT IDENTIFICATION

FINANCIAL PROJECT ID 201210-2-22-01 FEDERAL AID PROJECT NO. N/A COUNTY NAME POLK

SECTION NO. 16320 ROAD DESIGNATION SR 400 (I-4) LIMITS/MILEPOST MP 27.145 - 32.022

PROJECT DESCRIPTION WIDENING SR 400 (I-4) FROM WEST OF SR 25/US 27 TO WEST OF CR 532

PROPOSED ROADWAY TYPICAL SECTION

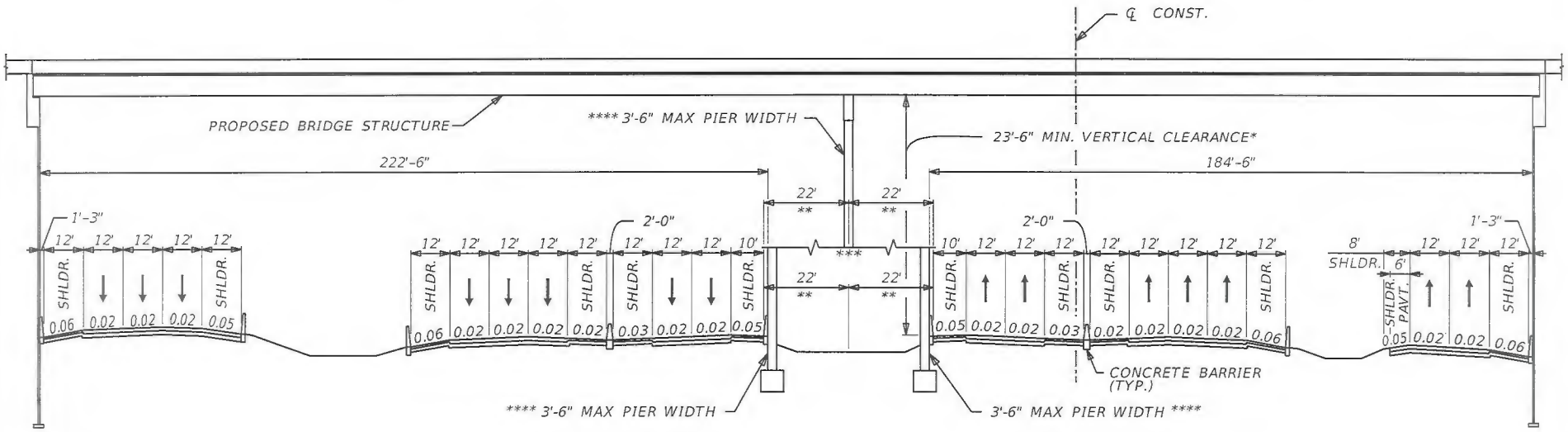

SR 400 (I-4) UNDER US 27/SR 25

* VERTICAL CLEARANCE MEASURED FROM EXPRESS LANE INSIDE EDGE OF TRAVEL TO LOW MEMBER.
** 44' REQUIRED FROM INSIDE FACE OF BARRIER TO INSIDE FACE OF BARRIER.
*** SINGLE PIER OR DOUBLE PIER CONFIGURATION MAY BE USED.
**** 3'-6" MAXIMUM PIER WIDTH ALLOWED.

SHEET 5-12

ROBERT M. DENNEY LICENSE No. 58593 STATE OF FLORIDA PROFESSIONAL ENGINEER

APPROVED BY	FDOT CONCURRENCE	FHWA CONCURRENCE
ROBERT M. DENNEY, P.E. Date Engineer Of Record 58593 HNTB CORPORATION 610 CRESCENT EXEC. CT. SUITE 400 LAKE MARY, FL 32746 (407) 805-0355 CERT OF AUTH NO 6500	ADM 8-10-17 B.A. Masing BERNIE MASING, P.E. FDOT District Design Engineer 8-18-17 Date	FHWA Transportation Engineer 4/17/18 Date

mbacal 3/3/2017 1:55:24 PM \\LKMw00\pmwork3\Jobs\59219 - I4 SAMR\TECHPROD\Typical Section Package\TYPDRD01-SEG-5.DGN

PROJECT IDENTIFICATION

FINANCIAL PROJECT ID 201210-2-22-01 FEDERAL AID PROJECT NO. N/A COUNTY NAME POLK

SECTION NO. 16320 ROAD DESIGNATION SR 400 (I-4) LIMITS/MILEPOST MP 27.145 - 32.022

PROJECT DESCRIPTION WIDENING SR 400 (I-4) FROM WEST OF SR 25/US 27 TO WEST OF CR 532

PROPOSED ROADWAY TYPICAL SECTION

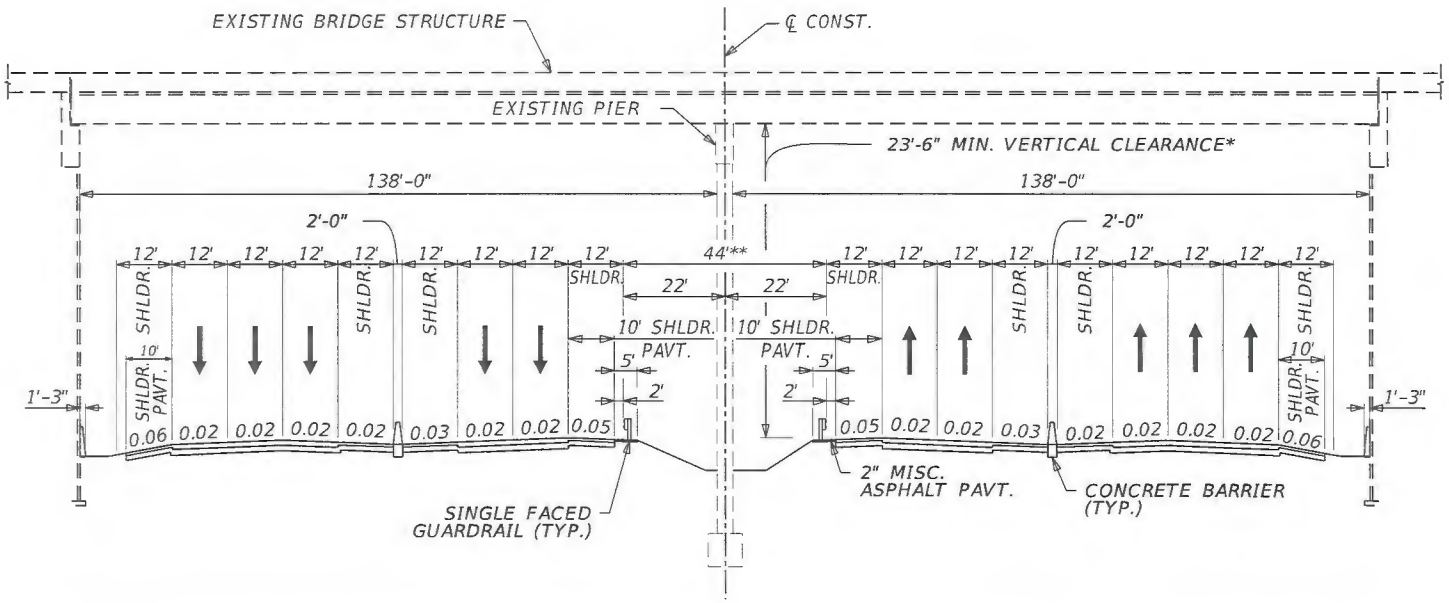

SR 400 (I-4) UNDER CR 54

* VERTICAL CLEARANCE MEASURED FROM EXPRESS LANE INSIDE EDGE OF TRAVEL TO LOW MEMBER.

** 44' REQUIRED FOR FUTURE RAIL CORRIDOR. FUTURE RAIL CORRIDOR IS MEASURED FROM FACE OF FUTURE INSIDE BARRIER TO FACE OF FUTURE INSIDE BARRIER.

SHEET 5-13

APPROVED BY	FDOT CONCURRENCE	FHWA CONCURRENCE
ROBERT M. DENNEY, P.E. Date Engineer Of Record 58593 HNTB CORPORATION 610 CRESCENT EXEC. CT. SUITE 400 LAKE MARY, FL 32746 (407) 805-0355 CERT OF AUTH NO 6500	AD II 8-18-17 B. A. Masing BERNIE MASING, P.E. FDOT District Design Engineer 8-18-17 Date	FHWA Transportation Engineer 1/12/18 Date

ROBERT M. DENNEY LICENSE No. 58593 STATE OF FLORIDA PROFESSIONAL ENGINEER

mbacal 8/8/2017 2:38:10 PM \\LKMw00\pmwork3\Jobs\59219 - 14 SAMR\TECHPROD\Typical Section Package\TYPDRD01-SEG-5.DGN

PROJECT IDENTIFICATION

FINANCIAL PROJECT ID 201210-2-22-01 FEDERAL AID PROJECT NO. N/A COUNTY NAME POLK

SECTION NO. 16320 ROAD DESIGNATION SR 400 (I-4) LIMITS/MILEPOST MP 27.145 - 32.022

PROJECT DESCRIPTION WIDENING SR 400 (I-4) FROM WEST OF SR 25/US 27 TO WEST OF CR 532

PROPOSED ROADWAY TYPICAL SECTION

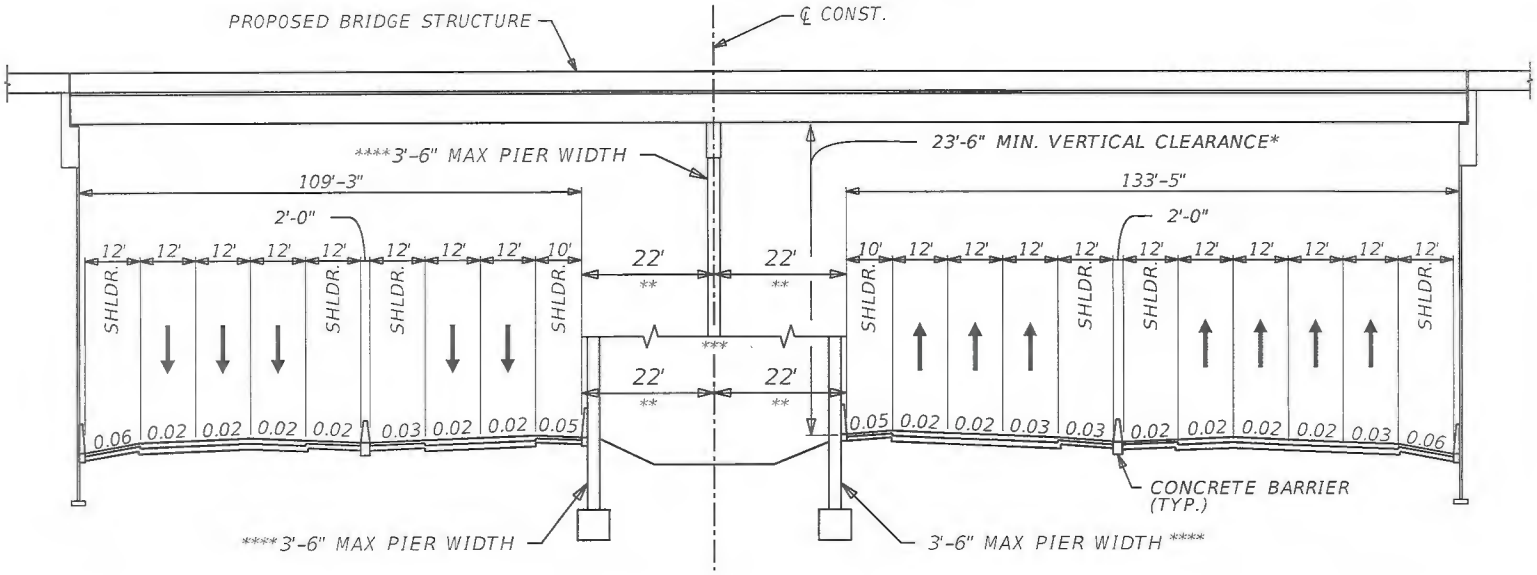

SR 400 (I-4) UNDER GRANDVIEW PARKWAY

* VERTICAL CLEARANCE MEASURED FROM EXPRESS LANE INSIDE EDGE OF TRAVEL TO LOW MEMBER.
** 44' REQUIRED FROM INSIDE FACE OF BARRIER TO INSIDE FACE OF BARRIER.
*** SINGLE PIER OR DOUBLE PIER CONFIGURATION MAY BE USED.
**** 3'-6" MAXIMUM PIER WIDTH ALLOWED.

SHEET 5-14

APPROVED BY	FDOT CONCURRENCE	FHWA CONCURRENCE
ROBERT M. DENNEY, P.E. Date Engineer Of Record 58593 HNTB CORPORATION 610 CRESCENT EXEC. CT. SUITE 400 LAKE MARY, FL 32746 (407) 805-0355 CERT OF AUTH NO 6500	BERNIE MASING, P.E. FDOT District Design Engineer 8-18-17 Date	FHWA Transportation Engineer 1/17/18 Date

ROBERT M. DENNEY LICENSE No. 58593 STATE OF FLORIDA PROFESSIONAL ENGINEER

mbacal 3/3/2017 1:55:24 PM \\LKMw00\pmwork3\Jobs\59219 - I4 SAMR\TECHPROD\Typical Section Package\TYPDRD01-SEG-5.DGN

I-4 Beyond the Ultimate

Orange County Typical Section Package Index

PD&E FPID: 432100-1 (Segment 1B)

Design FPID: 242484-8

I-4 Mainline

1B-1 Key Sheet
1B-2 I-4 Project Controls
1B-3 I-4 Typical Section with Rail Corridor (Orange County)
1B-4 I-4 Typical Section Bridge Viaduct Between SR 536 and SR 535 (Orange County)
1B-5 I-4 Typical Section Bridge Viaduct Between SR 535 and Daryl Carter Parkway (Orange County)
1B-6 I-4 Bridge Over SR 535 (Replace)
1B-7 I-4 Bridge Over Central Florida Parkway (Replace)

Ramps

1B-8 One Lane Ramp
1B-9 Two Lane Ramp
1B-10 Three Lane Ramp
1B-11 One Lane Bridge Ramp
1B-12 Two Lane Bridge Ramp
1B-13 Three Lane Bridge Ramp

SR 536

1B-14 SR 536 Project Controls
1B-15 SR 536 Bridge Section (Replace)
1B-16 I-4 Under SR 536 Eastbound Ramp
1B-17 I-4 Under SR 536 Mainline

SR 535

1B-18 SR 535/Apopka Vineland Rd. Project Controls
1B-19 Hotel Plaza Blvd. Project Controls
1B-20 Vineland Ave. Project Controls
1B-21 Palm Parkway Project Controls
1B-22 Winter Garden Vineland Rd. Project Controls
1B-23 Grand Cypress Boulevard Project Controls
1B-24 SR 535 Roadway Section Under I-4
1B-25 SR 535 Roadway Section with Elevated SB
1B-26 Apopka Vineland Rd. Roadway Section with Elevated NB
1B-27 Apopka Vineland Rd. NB Bridge Section Over Hotel Plaza
1B-28 SR 535 SB Bridge Section Over Vineland Avenue
1B-29 Hotel Plaza Loop Ramp Under Apopka Vineland Rd. NB
1B-30 SR 400 (I-4) EB Off Ramp Under SR 535 SB

I-4 Beyond the Ultimate

Orange County Typical Section Package Index

PD&E FPID: 432100-1 (Segment 1B)
Design FPID: 242484-8

1B-31 Hotel Plaza Boulevard – Elevated Left Turns
1B-32 Vineland Avenue Roadway Section
1B-33 Hotel Plaza Boulevard Left Turn Flyover Over Apopka Vineland Rd. SB
1B-34 Vineland Avenue Left Turn Flyover Over SR 535 NB
1B-35 Apopka Vineland Rd. SB Roadway Section Under Hotel Plaza Boulevard Bridge
1B-36 SR 535 NB Roadway Section Under Vineland Avenue Bridge
1B-37 Palm Parkway Roadway Section
1B-38 Winter Garden Vineland Rd. Roadway Section
1B-39 Grand Cypress Parkway Roadway Section
1B-40 Vinings Way Boulevard Roadway Section
1B-41 Apopka Vineland Rd./CR 435 Roadway Section

Daryl Carter Parkway

1B-42 Daryl Carter Parkway Project Controls
1B-43 I-4 Under Daryl Carter Parkway
1B-44 Daryl Carter Parkway Bridge Section

Central Florida Parkway

1B-45 Central Florida Parkway Project Controls
1B-46 I-4 Under Westbound Central Florida Parkway Ramp
1B-47 Central Florida Parkway Under I-4

STATE OF FLORIDA

DEPARTMENT OF TRANSPORTATION

FINANCIAL PROJECT ID 432100-1-22-01
(FEDERAL FUNDS)

N

0 3 6

Miles

ORANGE COUNTY (75280)

STATE ROAD NO. 400 (I-4)
I-4 BEYOND THE ULTIMATE
TYPICAL SECTION PACKAGE

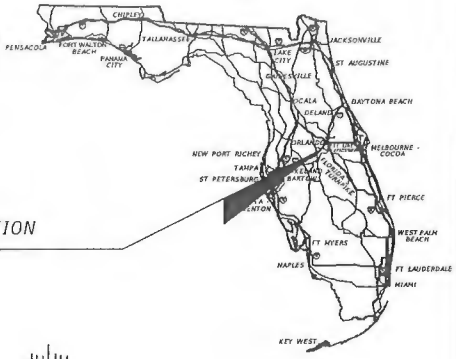

PROJECT LOCATION

END SEGMENT 1B
℄ EXIST. SR 400
STA. 1345+48.48
MP 5.650 (ORANGE CO.)

SR 535

BEGIN SEGMENT 1B
℄ EXIST. SR 400
STA. 1042+95.00
MP 0.000 (ORANGE CO.)

CENTRAL FLORIDA PKWY.

SR 536

OSCEOLA / ORANGE CO. DIVIDE
MP 7.885 / 0.000

R-26-E / R-27-E | R-27-E / R-28-E | R-28-E / R-29-E | R-29-E / R-30-E

T-23-S / T-24-S | T-24-S / T-25-S | T-25-S / T-26-S | T-26-S / T-27-S

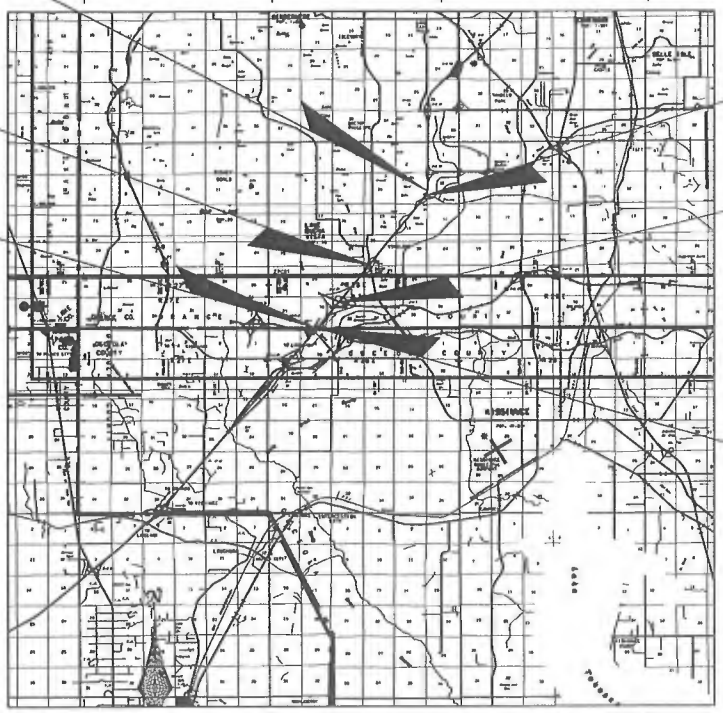

PROJECT LENGTH IS BASED ON ℄ OF CONSTRUCTION

LENGTH OF PROJECT

	LINEAR FEET	MILES
ROADWAY	29094.02	5.510
BRIDGES	1160.38	0.220
NET LENGTH OF PROJECT	30254.40	5.730
EXCEPTIONS	--	--
GROSS LENGTH OF PROJECT	30254.40	5.730

FDOT PROJECT MANAGER: BEATA STYŚ-PALASZ, PE

SHEET 1B-1

PROJECT IDENTIFICATION

FINANCIAL PROJECT ID: 432100-1-22-01 COUNTY (SECTION): ORANGE (75280)

PROJECT DESCRIPTION: WIDENING SR 400 (I-4) FROM WEST OF CR 532 TO WEST OF SR 435 (KIRKMAN RD.) AND FROM 1 MILE EAST OF SR 434 TO 1/2 MILE EAST OF SR 472.

PROJECT CONTROLS (SR 400/I-4)

FUNCTIONAL CLASSIFICATION

( ) RURAL
(X) URBAN

(X) FREEWAY/EXPWY. ( ) MAJOR COLL.
( ) PRINCIPAL ART. ( ) MINOR COLL.
( ) MINOR ART. ( ) LOCAL

HIGHWAY SYSTEM

Yes	No	
(X)	( )	NATIONAL HIGHWAY SYSTEM
(X)	( )	FLORIDA INTRASTATE HIGHWAY SYSTEM
(X)	( )	STRATEGIC INTERMODAL SYSTEM
(X)	( )	STATE HIGHWAY SYSTEM
( )	(X)	OFF STATE HIGHWAY SYSTEM

ACCESS CLASSIFICATION

(X) 1 - FREEWAY
( ) 2 - RESTRICTIVE w/Service Roads
( ) 3 - RESTRICTIVE w/660 ft. Connection Spacing
( ) 4 - NON-RESTRICTIVE w/2640 ft. Signal Spacing
( ) 5 - RESTRICTIVE w/440 ft. Connection Spacing
( ) 6 - NON-RESTRICTIVE w/1320 ft. Signal Spacing
( ) 7 - BOTH MEDIAN TYPES

TRAFFIC

	YEAR	AADT
OPENING	2020	202,000
INTERIM	2030	237,000
DESIGN	2040	269,000

DESIGN SPEED 70 MPH
POSTED SPEED 70 MPH

DISTRIBUTION
K 7.4
D 52.92
T_{24} 10.2%

CRITERIA

(X) NEW CONSTRUCTION / RECONSTRUCTION
( ) RRR INTERSTATE / FREEWAY
( ) RRR NON-INTERSTATE / FREEWAY
( ) TDLC / NEW CONSTRUCTION / RECONSTRUCTION
( ) TDLC / RRR
( ) MANUAL OF UNIFORM MINIMUM STANDARDS (FLORIDA GREENBOOK) (OFF-STATE HIGHWAY SYSTEM ONLY)

DESIGN SPEED APPROVALS

AK Brennan — 3/17/17
DISTRICT DESIGN ENGINEER — DATE

4/10/17
DISTRICT TRAFFIC OPERATIONS ENGINEER — DATE

LIST ANY POTENTIAL EXCEPTIONS AND VARIATIONS RELATED TO TYPICAL SECTION ELEMENTS:

BORDER WIDTH (VARIATION) - FOR THE BORDER WIDTHS LESS THAN 94-FT (94-FT REQUIRED)
SHOULDER WIDTH (VARIATION) - FOR THE 10-FT MEDIAN GUL SHOULDER (12-FT REQUIRED)
SHOULDER WIDTH (VARIATION) - FOR THE 4-FT MEDIAN EXPRESS LANE SHOULDER (6-FT REQUIRED)

LIST MAJOR STRUCTURES LOCATION/DESCRIPTION - REQUIRING INDEPENDENT STRUCTURE DESIGN:

SR 536	(750324, 750323, 750322)
SR 535	(750367, 750368)
DARYL CARTER PARKWAY	(754115)
CENTRAL FLORIDA PARKWAY	(750142, 750200, 750402)

LIST MAJOR UTILITIES WITHIN PROJECT CORRIDOR:
GAS (CENTRAL FLORIDA GAS)
WATER (ORANGE COUNTY UTILITIES)
COMMUNICATIONS (BRIGHTHOUSE NETWORKS, COMCAST, LEVEL 3, VERIZON)
WASTEWATER (ORANGE COUNTY UTILITIES)
ELECTRIC (DUKE ENERGY DISTRIBUTION, DUKE ENERGY TRANSMISSION)

LIST OTHER INFORMATION PERTINENT TO DESIGN OF PROJECT:

N/A

PROJECT IDENTIFICATION

FINANCIAL PROJECT ID 432100-1-22-01 FEDERAL AID PROJECT NO. N/A COUNTY NAME ORANGE

SECTION NO. 75280 ROAD DESIGNATION SR 400 (I-4) LIMITS/MILEPOST MP 0.000 - 9.528

PROJECT DESCRIPTION WIDENING SR 400 (I-4) FROM WEST OF CR 532 TO WEST OF SR 435 KIRKMAN ROAD AND FROM 1 MILE EAST OF SR 434 TO 1/2 MILE EAST OF SR 472.

PROPOSED ROADWAY TYPICAL SECTION

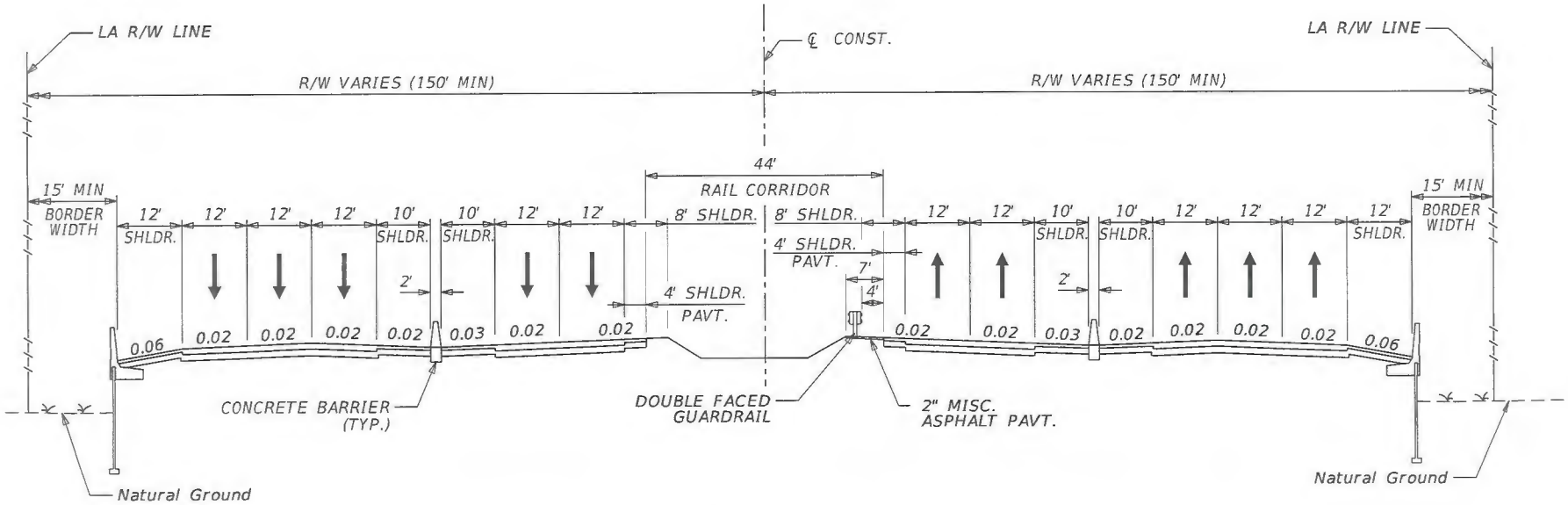

DESIGN SPEED = 70 MPH
SR 400 (I-4) WITH RAIL CORRIDOR
STA 1042+95.00 TO STA 1121+50.00
STA 1288+00.00 TO STA 1345+48.48

SHEET 1B-3

APPROVED BY	FDOT CONCURRENCE	FHWA CONCURRENCE
ROBERT M. DENNEY, P.E. Engineer of Record 58593 — Date 2/9/2017	ANNETTE K. BRENNAN, P.E. FDOT District Design Engineer — Date 3/17/17	FHWA Transportation Engineer — Date 1/17/18

HNTB CORPORATION
610 CRESCENT EXEC. CT.
SUITE 400
LAKE MARY, FL 32746
(407) 805-0355
CERT OF AUTH NO 6500

ROBERT M. DENNEY LICENSE NO. 58593 STATE OF FLORIDA PROFESSIONAL ENGINEER

PROJECT IDENTIFICATION

FINANCIAL PROJECT ID 432100-1-22-01 FEDERAL AID PROJECT NO. N/A COUNTY NAME ORANGE

SECTION NO. 75280 ROAD DESIGNATION SR 400 (I-4) LIMITS/MILEPOST MP 0.000 - 9.528

PROJECT DESCRIPTION WIDENING SR 400 (I-4) FROM WEST OF CR 532 TO WEST OF SR 435 KIRKMAN ROAD AND FROM 1 MILE EAST OF SR 434 TO 1/2 MILE EAST OF SR 472.

PROPOSED ROADWAY TYPICAL SECTION

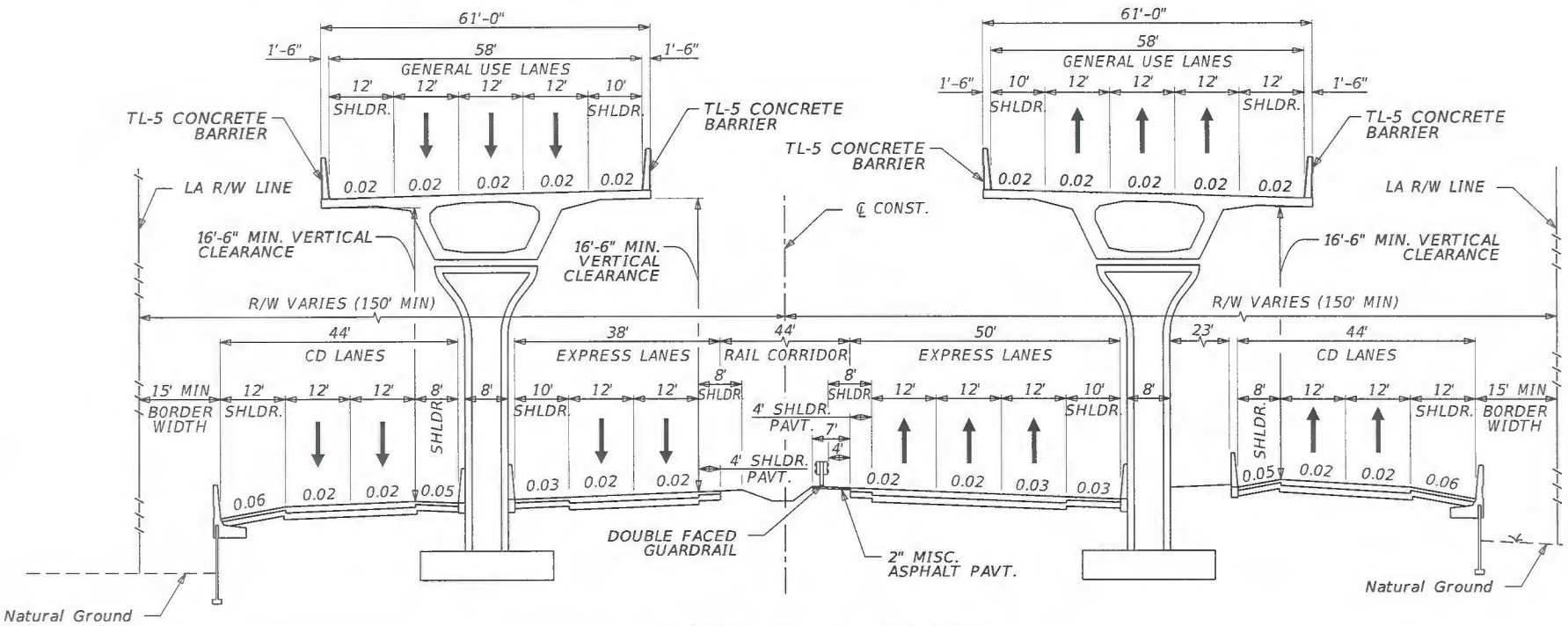

DESIGN SPEED = 70 MPH

SR 400 (I-4) BRIDGE VIADUCT BETWEEN SR 536 AND SR 535

STA 1121+50 TO STA 1168+50

SHEET 1B-4

APPROVED BY	FDOT CONCURRENCE	FHWA CONCURRENCE
ROBERT M. DENNEY, P.E. Engineer Of Record 58593 — Date 3/17	ANNETTE K. BRENNAN, P.E. FDOT District Design Engineer — Date 3/17/17	FHWA Transportation Engineer — Date 1/17/18

HNTB CORPORATION
610 CRESCENT EXEC. CT.
SUITE 400
LAKE MARY, FL 32746
(407) 805-0355
CERT OF AUTH NO 6500

ROBERT M. DENNEY LICENSE No. 58593 STATE OF FLORIDA PROFESSIONAL ENGINEER

mbecal 2/9/2017 2:38:43 PM \\LKMw00\pmwork3\Jobs\59219 - I4 SAMR\TECHPROD\Typical Section Package\TYPDRD01-I-4 TYPICALS.DGN

PROJECT IDENTIFICATION

FINANCIAL PROJECT ID 432100-1-22-01 FEDERAL AID PROJECT NO. N/A COUNTY NAME ORANGE

SECTION NO. 75280 ROAD DESIGNATION SR 400 (I-4) LIMITS/MILEPOST MP 0.000 - 9.528

PROJECT DESCRIPTION WIDENING SR 400 (I-4) FROM WEST OF CR 532 TO WEST OF SR 435 KIRKMAN ROAD AND FROM 1 MILE EAST OF SR 434 TO 1/2 MILE EAST OF SR 472.

PROPOSED ROADWAY TYPICAL SECTION

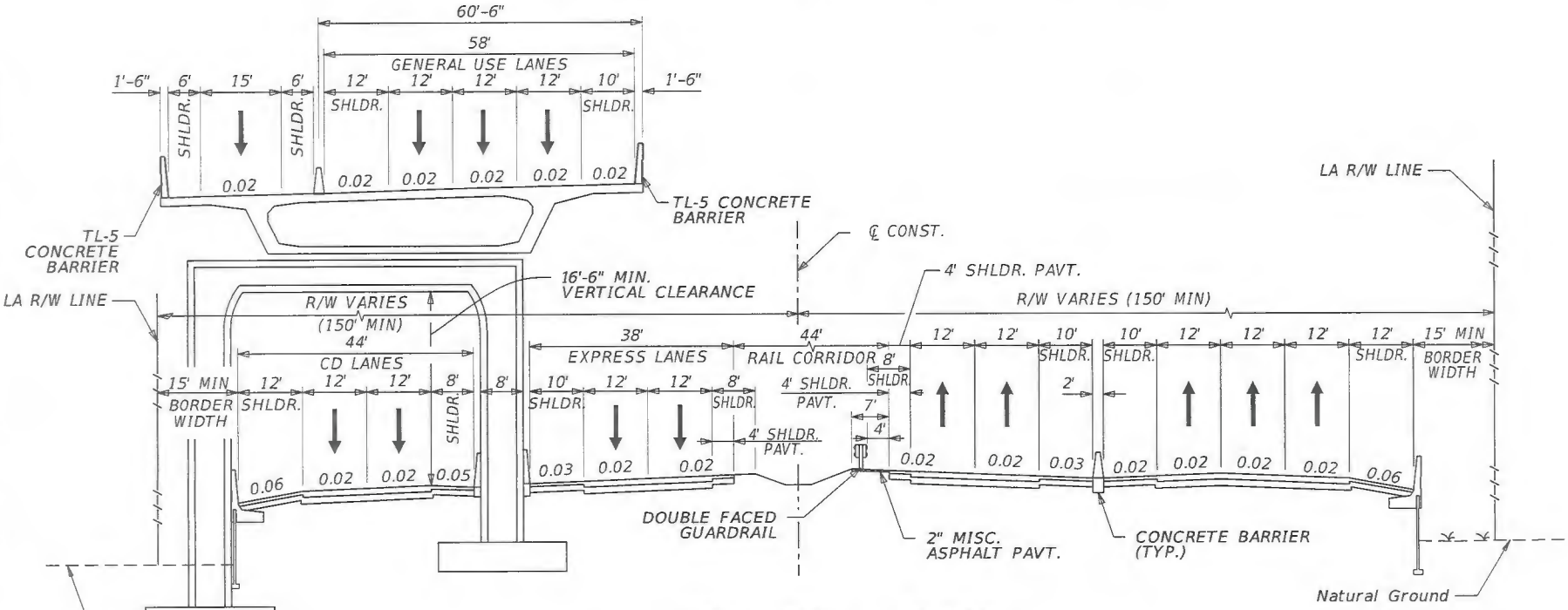

DESIGN SPEED = 70 MPH

SR 400 (I-4) BRIDGE VIADUCT BETWEEN SR 535 AND DARYL CARTER PARKWAY

STA 1168+50 TO STA 1288+00

SHEET 1B-5

APPROVED BY	FDOT CONCURRENCE	FHWA CONCURRENCE
2/9/17 Date ROBERT M. DENNEY, P.E. Engineer of Record 58593	3/17/17 Date ANNETTE K. BRENNAN, P.E. FDOT District Design Engineer	1/17/18 Date FHWA Transportation Engineer

HNTB CORPORATION
610 CRESCENT EXEC. CT.
SUITE 400
LAKE MARY, FL 32746
(407) 805-0355
CERT OF AUTH NO 6500

ROBERT M. DENNEY LICENSE No 58593 STATE OF FLORIDA PROFESSIONAL ENGINEER

mbaca 2/9/2017 2:38:43 PM \\LKMw00\pmwork3\Jobs\59219 - I4 SAMR\TECHPROD\Typical Section Package\TYPDRD01-I-4 TYPICALS.DGN

PROJECT IDENTIFICATION

FINANCIAL PROJECT ID 432100-1-22-01 FEDERAL AID PROJECT NO. N/A COUNTY NAME ORANGE

SECTION NO. 75280 ROAD DESIGNATION SR 400 (I-4) LIMITS/MILEPOST MP 0.000 - 9.528

PROJECT DESCRIPTION WIDENING SR 400 (I-4) FROM WEST OF CR 532 TO WEST OF SR 435 KIRKMAN ROAD AND FROM 1 MILE EAST OF SR 434 TO 1/2 MILE EAST OF SR 472.

PROPOSED STRUCTURE TYPICAL SECTION

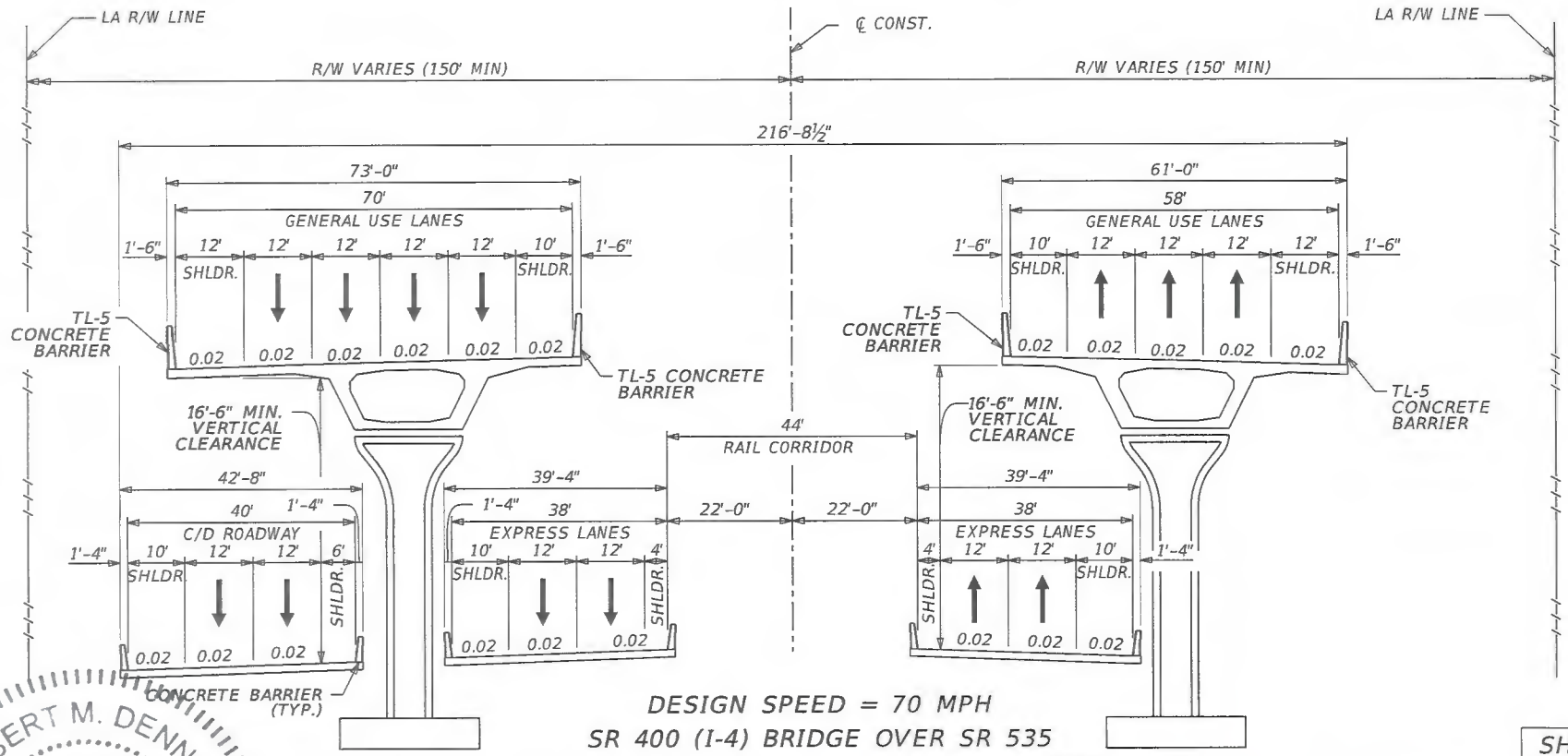

DESIGN SPEED = 70 MPH

SR 400 (I-4) BRIDGE OVER SR 535

SHEET 1B-6

APPROVED BY	FDOT CONCURRENCE	FHWA CONCURRENCE
2/9/17 Date ROBERT M. DENNEY, P.E. Engineer of Record 58593 HNTB CORPORATION 610 CRESCENT EXEC. CT. SUITE 400 LAKE MARY, FL 32746 (407) 805-0355 CERT OF AUTH NO 6500	AK Brennan 3/17/17 ANNETTE K. BRENNAN, P.E. FDOT District Design Engineer Date	1/17/18 FHWA Transportation Engineer Date

ROBERT M. DENNEY LICENSE No. 58593 STATE OF FLORIDA PROFESSIONAL ENGINEER

mbacal 2/9/2017 2:38:44 PM \\LKMw00\pmwork3\Jobs\59219 - I4 SAMR\TECHPROD\Typical Section Package\TYPDRD01-I-4 TYPICALS.DGN

PROJECT IDENTIFICATION

FINANCIAL PROJECT ID 432100-1-22-01 FEDERAL AID PROJECT NO. N/A COUNTY NAME ORANGE

SECTION NO. 75280 ROAD DESIGNATION SR 400 (I-4) LIMITS/MILEPOST MP 0.000 - 9.528

PROJECT DESCRIPTION WIDENING SR 400 (I-4) FROM WEST OF CR 532 TO WEST OF SR 435 KIRKMAN ROAD AND FROM 1 MILE EAST OF SR 434 TO 1/2 MILE EAST OF SR 472.

PROPOSED STRUCTURE TYPICAL SECTION

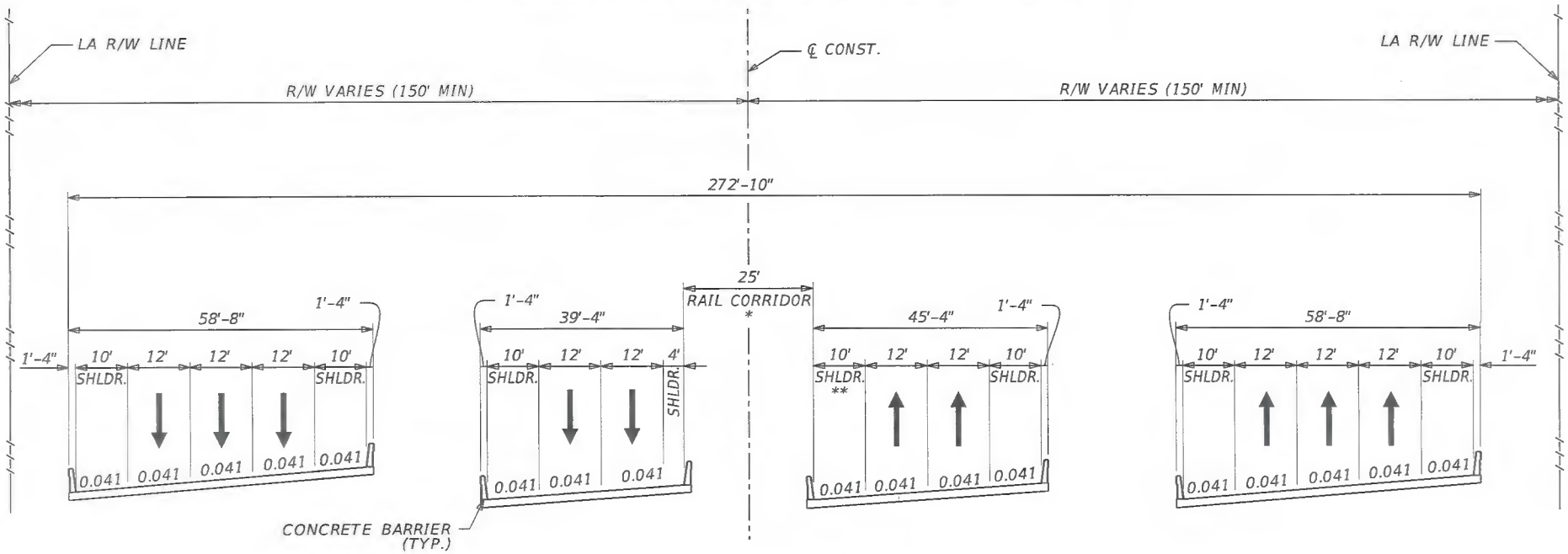

DESIGN SPEED = 70 MPH

SR 400 (I-4) BRIDGE OVER CENTRAL FLORIDA PKWY

* 25-FT REQUIRED FROM INSIDE FACE OF BARRIER TO INSIDE FACE OF BARRIER (HIGH SPEED RAIL ELEVATED IN THIS AREA).

** 10-FT WIDE SHOULDER USED IN LIEU OF 4-FT SHOULDER TO MEET STOPPING SIGHT DISTANCE.

SHEET 1B-7

APPROVED BY	FDOT CONCURRENCE	FHWA CONCURRENCE
ROBERT M. DENNEY, P.E. Date Engineer of Record 58593 HNTB CORPORATION 610 CRESCENT EXEC. CT. SUITE 400 LAKE MARY, FL 32746 (407) 805-0355 CERT OF AUTH NO 6500	ANNETTE K. BRENNAN, P.E. 3/17/17 Date FDOT District Design Engineer	FHWA Transportation Engineer 1/10/18 Date

ROBERT M. DENNEY LICENSE No. 58593 STATE OF FLORIDA PROFESSIONAL ENGINEER 2/9/17

mbacal 2/9/2017 2:38:44 PM \\LKMw00\pmwork3\Jobs\59219 - I4 SAMR\TECHPROD\Typical Section Package\TYPDRD01-I-4 TYPICALS.DGN

PROJECT IDENTIFICATION

FINANCIAL PROJECT ID 432100-1-22-01 FEDERAL AID PROJECT NO. N/A COUNTY NAME ORANGE

SECTION NO. 75280 ROAD DESIGNATION SR 400 (I-4) LIMITS/MILEPOST MP 0.000 - 9.528

PROJECT DESCRIPTION WIDENING SR 400 (I-4) FROM WEST OF CR 532 TO WEST OF SR 435 KIRKMAN ROAD AND FROM 1 MILE EAST OF SR 434 TO 1/2 MILE EAST OF SR 472.

Ramp	Design Speed	Ramp	Design Speed	Ramp	Design Speed
SEGMENT 1B		I-4 EB TO SR 536 WB	30	I-4 WB GUL TO SR 535 SB	50
WORLD DR EB TO I-4 GUL WB	50	SR 536 WB TO I-4 WB CD ROAD	30	I-4 WB CD RAMP TO SR 535 NB	50
I-4 EB TO WORLD DR EB	50	I-4 WB EXPRESS LANES RAMP TO I-4 WB CD ROAD	50	I-4 WB CD RAMP TO SR 535 SB	50
I-4 WB RAMP TO WORLD DR EB	30	I-4 WB EXPRESS LANES RAMP TO SR 536 WB	50	DARYL CARTER PKWY RAMP TO I-4 WB	50
I-4 EB GUL TO WORLD DR WB	30	I-4 WB CD ROAD RAMP TO I-4 WB GUL	50	I-4 WB RAMP TO DARYL CARTER PKWY	50
I-4 EXPRESS LANES EB TO SR 417 NB	50	I-4 EB GUL TO I-4 EB EXPRESS LANES	50	I-4 EB RAMP TO DARYL CARTER PKWY	50
SR 417 SB TO I-4 EXPRESS LANES WB	50	I-4 EB GUL TO SR 535 SB	30	SR 535 NB TO HOTEL PLAZA BLVD	30
I-4 EB RAMP TO SR 530 WB	30	I-4 EB GUL TO SR 535 SB	50	CENTRAL FL PKWY WB TO I-4 WB CD ROAD	50
I-4 EB RAMP TO SR 530 WB	50	I-4 EB GUL TO SR 535 NB	50	CENTRAL FL PKWY EB TO I-4 WB	50
I-4 WB RAMP TO SR 530 EB	30				
I-4 EB RAMP TO OSCEOLA PKWY	50				
I-4 EB EXPRESS LANES TO SR 536/SR 535	50				
SR 536 TO I-4 WB GUL	50				
SR 536 TO I-4 WB EXPRESS LANES	50				
SR 536 EB TO I-4 WB	50				
I-4 WB CD ROAD TO I-4 WB	50				
I-4 WB CD ROAD TO SR 536 EB	30				
SR 536 EB TO I-4 EB GUL	50				

PROPOSED ROADWAY TYPICAL SECTION

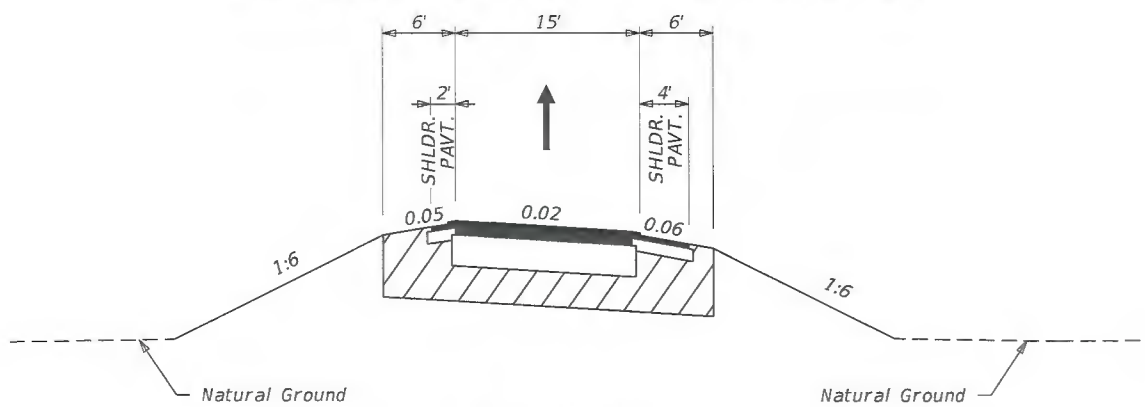

SR 400 (I-4)
ONE LANE RAMP

SHEET 1B-8

APPROVED BY	FDOT CONCURRENCE	FHWA CONCURRENCE
ROBERT M. DENNEY, P.E. Engineer Of Record 58593 — Date 2/9/17	ANNETTE K. BRENNAN, P.E. FDOT District Design Engineer — Date 3/17/17	FHWA Transportation Engineer — Date 1/17/18

HNTB CORPORATION
610 CRESCENT EXEC. CT.
SUITE 400
LAKE MARY, FL 32746
(407) 805-0355
CERT OF AUTH NO 6500

ROBERT M. DENNEY LICENSE NO. 58593 STATE OF FLORIDA PROFESSIONAL ENGINEER

mbacel 2/9/2017 2:38:45 PM \\LKMw00\pmwork3\Jobs\59219 - I4 SAMR\TECHPROD\Typical Section Package\TYPDRD01-RAMPS.DGN

PROJECT IDENTIFICATION

FINANCIAL PROJECT ID 432100-1-22-01 FEDERAL AID PROJECT NO. N/A COUNTY NAME ORANGE

SECTION NO. 75280 ROAD DESIGNATION SR 400 (I-4) LIMITS/MILEPOST MP 0.000 - 9.528

PROJECT DESCRIPTION WIDENING SR 400 (I-4) FROM WEST OF CR 532 TO WEST OF SR 435 KIRKMAN ROAD AND FROM 1 MILE EAST OF SR 434 TO 1/2 MILE EAST OF SR 472.

Ramp	Design Speed	Ramp	Design Speed
SEGMENT 1B		DARYL CARTER PKWY RAMP TO I-4 WB	50
WORLD DR RAMP TO I-4 EB	50	I-4 EB RAMP TO DARYL CARTER PKWY	50
I-4 WB TO WORLD DR WB	50	DARYL CARTER PKWY RAMP TO I-4 EB	50
SR 530 EB RAMP TO I-4 EB	50	I-4 WB RAMP TO DARYL CARTER PKWY	50
I-4 WB GUL TO SR 530	50	I-4 EB GUL TO CENTRAL FL PKWY	50
I-4 EB TO SR 536/SR535	50	I-4 WB GUL TO CENTRAL FL PKWY	50
I-4 EB CD ROAD TO SR 536 EB	50	CENTRAL FL PKWY TO I-4 EB CD ROAD	50
SR 536 TO SR 535	50	CENTRAL FL PKWY TO I-4 EB GUL	50
SR 536 TO I-4 EB EXPRESS LANES	50		
I-4 EB TO SR 535	50		
SR 536 TO I-4 EB GUL	50		
I-4 WB RAMP TO 536 WB	50		
SR 535 SB TO I-4 WB GUL	50		
SR 535 NB TO I-4 EB GUL	50		
I-4 WB GUL TO SR 535 NB	30		

PROPOSED ROADWAY TYPICAL SECTION

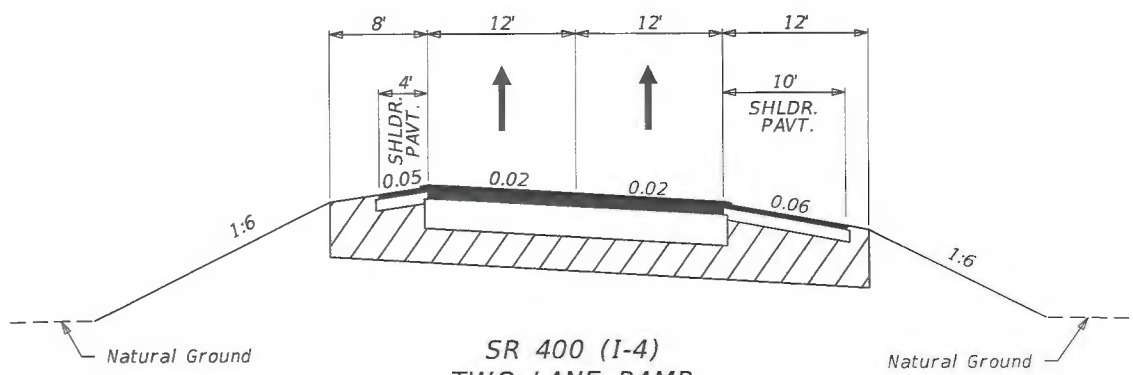

SR 400 (I-4)
TWO LANE RAMP

SHEET 1B-9

APPROVED BY	FDOT CONCURRENCE	FHWA CONCURRENCE
ROBERT M. DENNEY, P.E. Engineer of Record 58593 — Date 2/9/17	ANNETTE K. BRENNAN, P.E. FDOT District Design Engineer — Date 3/17/17	FHWA Transportation Engineer — Date 1/12/18

HNTB CORPORATION
610 CRESCENT EXEC. CT.
SUITE 400
LAKE MARY, FL 32746
(407) 805-0355
CERT OF AUTH NO 6500

ROBERT M. DENNEY LICENSE No. 58593 STATE OF FLORIDA PROFESSIONAL ENGINEER

mbacal 2/9/2017 2:38:45 PM \\LKMw00\pmwork3\Jobs\59219 - I4 SAMR\TECHPROD\Typical Section Package\TYPDRD01-RAMPS.DGN

PROJECT IDENTIFICATION

FINANCIAL PROJECT ID 432100-1-22-01 FEDERAL AID PROJECT NO. N/A COUNTY NAME ORANGE

SECTION NO. 75280 ROAD DESIGNATION SR 400 (I-4) LIMITS/MILEPOST MP 0.000 - 9.528

PROJECT DESCRIPTION WIDENING SR 400 (I-4) FROM WEST OF CR 532 TO WEST OF SR 435 KIRKMAN ROAD AND FROM 1 MILE EAST OF SR 434 TO 1/2 MILE EAST OF SR 472.

Ramp	Design Speed
SEGMENT 1B	
SR 536 EB TO I-4 EB/SR 535	50
I-4 WB RAMP TO 536 WB	50

PROPOSED ROADWAY TYPICAL SECTION

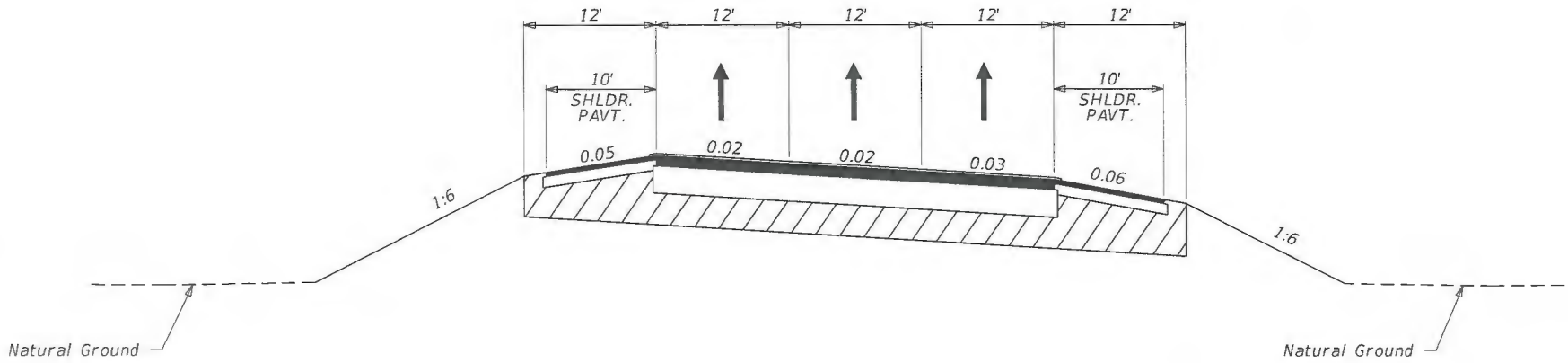

SR 400 (I-4)
THREE LANE RAMP

SHEET 1B-10

APPROVED BY	FDOT CONCURRENCE	FHWA CONCURRENCE
ROBERT M. DENNEY, P.E. Engineer Of Record 58593 — Date 2/9/17	ANNETTE K. BRENNAN, P.E. FDOT District Design Engineer — Date 3/17/17	FHWA Transportation Engineer — Date 1/17/18
HNTB CORPORATION 610 CRESCENT EXEC. CT. SUITE 400 LAKE MARY, FL 32746 (407) 805-0355 CERT OF AUTH NO 6500		

ROBERT M. DENNEY LICENSE No. 58593 STATE OF FLORIDA PROFESSIONAL ENGINEER

mbacal 2/9/2017 2:38:45 PM \\LKMw00\pmwork3\Jobs\59219 - I4 SAMR\TECHPROD\Typical Section Package\TYPDRD01-RAMPS.DGN

PROJECT IDENTIFICATION

FINANCIAL PROJECT ID 432100-1-22-01 FEDERAL AID PROJECT NO. N/A COUNTY NAME ORANGE

SECTION NO. 75280 ROAD DESIGNATION SR 400 (I-4) LIMITS/MILEPOST MP 0.000 - 9.528

PROJECT DESCRIPTION WIDENING SR 400 (I-4) FROM WEST OF CR 532 TO WEST OF SR 435 KIRKMAN ROAD AND FROM 1 MILE EAST OF SR 434 TO 1/2 MILE EAST OF SR 472.

Ramp	Design Speed
SEGMENT 1B	
I-4 EXPRESS LANES EB TO SR 417 NB	50
SR 417 SB TO I-4 EXPRESS LANES WB	50
SR 530 EB RAMP TO I-4 WB	50
I-4 EB RAMP TO SR 530 WB	50
I-4 EB EXPRESS LANES TO SR 536/SR 535	50
SR 536 TO I-4 EB GUL	50
I-4 WB CD ROAD RAMP TO I-4 WB GUL	50
I-4 WB GUL TO SR 535 SB	50
DARYL CARTER PKWY RAMP TO I-4 WB	50
CENTRAL FL PKWY WB TO I-4 WB CD ROAD	50
I-4 WB TO CENTRAL FL PKWY	50

PROPOSED STRUCTURE TYPICAL SECTION

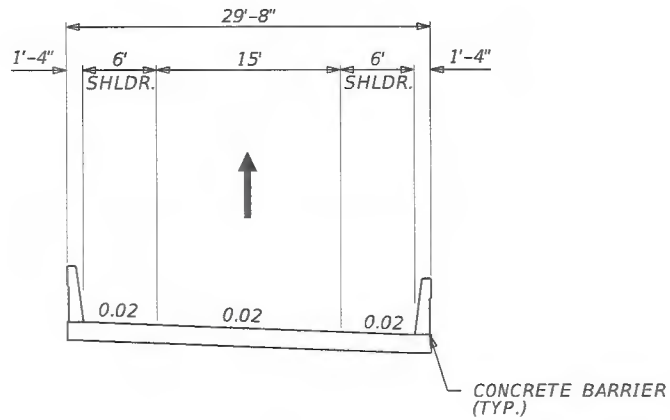

SR 400 (I-4)
ONE LANE BRIDGE RAMP

SHEET 1B-11

APPROVED BY	FDOT CONCURRENCE	FHWA CONCURRENCE
ROBERT M. DENNEY, P.E. Engineer Of Record 58593 — Date 2/9/17	ANNETTE K. BRENNAN, P.E. FDOT District Design Engineer — Date 3/17/17	FHWA Transportation Engineer — Date 1/17/18

HNTB CORPORATION
610 CRESCENT EXEC. CT.
SUITE 400
LAKE MARY, FL 32746
(407) 805-0355
CERT OF AUTH NO 6500

ROBERT M. DENNEY LICENSE No. 58593 STATE OF FLORIDA PROFESSIONAL ENGINEER

PROJECT IDENTIFICATION

FINANCIAL PROJECT ID 432100-1-22-01 FEDERAL AID PROJECT NO. N/A COUNTY NAME ORANGE

SECTION NO. 75280 ROAD DESIGNATION SR 400 (I-4) LIMITS/MILEPOST MP 0.000 - 9.528

PROJECT DESCRIPTION WIDENING SR 400 (I-4) FROM WEST OF CR 532 TO WEST OF SR 435 KIRKMAN ROAD AND FROM 1 MILE EAST OF SR 434 TO 1/2 MILE EAST OF SR 472.

Ramp	Design Speed
SEGMENT 1B	
SR 417 TO I-4 WB	50
I-4 EB TO SR 536/SR535	50
SR 536 TO I-4 EB EXPRESS LANES	50
SR 536 TO I-4 EB GUL	50
DARYL CARTER PKWY RAMP TO I-4 EB	50
HOTEL PLAZA BLVD TO SR 535 NB	30
I-4 WB TO CENTRAL FL PKWY	50

PROPOSED STRUCTURE TYPICAL SECTION

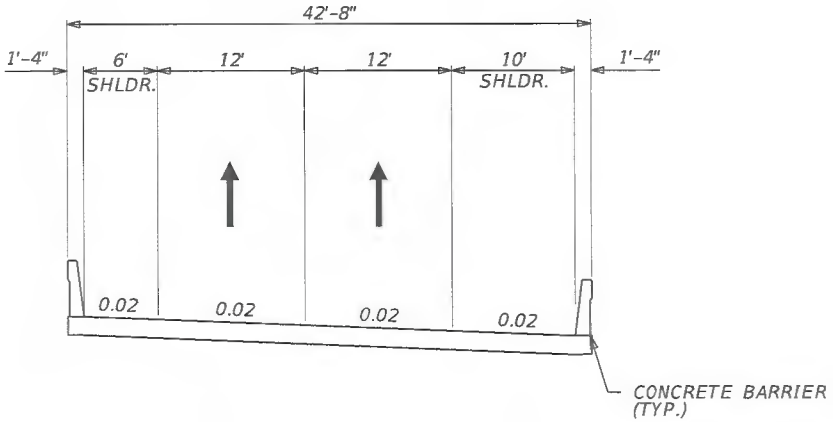

SR 400 (I-4)
TWO LANE BRIDGE RAMP

SHEET 1B-12

APPROVED BY	FDOT CONCURRENCE	FHWA CONCURRENCE
ROBERT M. DENNETT, P.E. No 58593 STATE OF FLORIDA PROFESSIONAL ENGINEER Engineer Of Record 58593 — Date 2/9/17 HNTB CORPORATION 610 CRESCENT EXEC. CT. SUITE 400 LAKE MARY, FL 32746 (407) 805-0355 CERT OF AUTH NO 6500	ANNETTE K. BRENNAN, P.E. FDOT District Design Engineer — Date 3/17/17	FHWA Transportation Engineer — Date 1/17/18

PROJECT IDENTIFICATION

FINANCIAL PROJECT ID 432100-1-22-01 FEDERAL AID PROJECT NO. N/A COUNTY NAME ORANGE

SECTION NO. 75280 ROAD DESIGNATION SR 400 (I-4) LIMITS/MILEPOST MP 0.000 - 9.528

PROJECT DESCRIPTION WIDENING SR 400 (I-4) FROM WEST OF CR 532 TO WEST OF SR 435 KIRKMAN ROAD AND FROM 1 MILE EAST OF SR 434 TO 1/2 MILE EAST OF SR 472.

Ramp	Design Speed
SEGMENT 1B	
SR 536 EB TO I-4 EB/SR 535	50

PROPOSED STRUCTURE TYPICAL SECTION

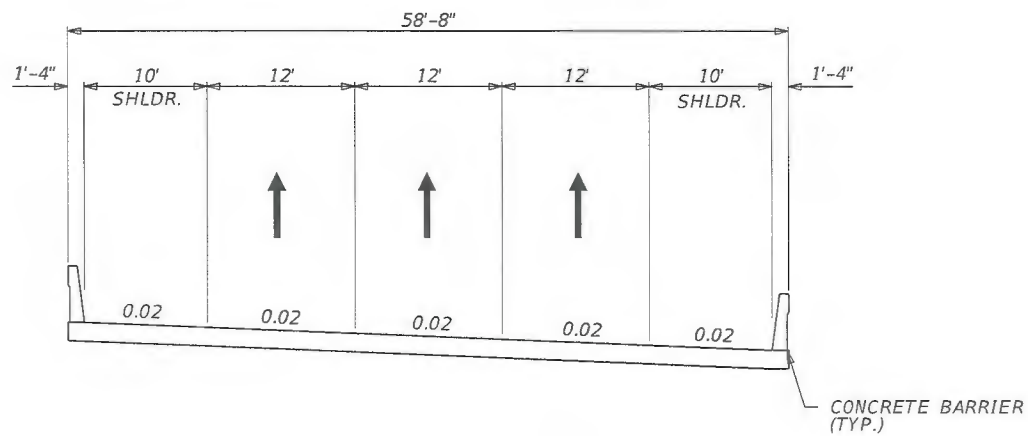

SR 400 (I-4)
THREE LANE BRIDGE RAMP

SHEET 1B-13

APPROVED BY	FDOT CONCURRENCE	FHWA CONCURRENCE
2/9/17 Date ROBERT M. DENNEY, P.E. Engineer of Record 58593 HNTB CORPORATION 610 CRESCENT EXEC. CT. SUITE 400 LAKE MARY, FL 32746 (407) 805-0355 CERT OF AUTH NO 6500	3/17/17 Date ANNETTE K. BRENNAN, P.E. FDOT District Design Engineer	1/17/18 Date FHWA Transportation Engineer

ROBERT M. DENNEY LICENSE NO. 58593 STATE OF FLORIDA PROFESSIONAL ENGINEER

mbacal 2/9/2017 2:38:46 PM \\LKMw00\pmwork3\Jobs\59219 - I4 SAMR\TECHPROD\Typical Section Package\TYPDRD01-RAMPS.DGN

PROJECT IDENTIFICATION

FINANCIAL PROJECT ID: 432100-1-22-01 COUNTY (SECTION): ORANGE (75280)

PROJECT DESCRIPTION: WIDENING SR 400 (I-4) FROM WEST OF CR 532 TO WEST OF SR 435 (KIRKMAN RD.) AND FROM 1 MILE EAST OF SR 434 TO 1/2 MILE EAST OF SR 472.

PROJECT CONTROLS (SR 536)

FUNCTIONAL CLASSIFICATION

( ) RURAL
(X) URBAN

( ) FREEWAY/EXPWY. ( ) MAJOR COLL.
( ) PRINCIPAL ART. ( ) MINOR COLL.
(X) MINOR ART. ( ) LOCAL

HIGHWAY SYSTEM

Yes	No	
( )	(X)	NATIONAL HIGHWAY SYSTEM
( )	(X)	FLORIDA INTRASTATE HIGHWAY SYSTEM
( )	(X)	STRATEGIC INTERMODAL SYSTEM
(X)	( )	STATE HIGHWAY SYSTEM
( )	(X)	OFF STATE HIGHWAY SYSTEM

ACCESS CLASSIFICATION

( ) 1 - FREEWAY
( ) 2 - RESTRICTIVE w/Service Roads
(X) 3 - RESTRICTIVE w/660 ft. Connection Spacing
( ) 4 - NON-RESTRICTIVE w/2640 ft. Signal Spacing
( ) 5 - RESTRICTIVE w/440 ft. Connection Spacing
( ) 6 - NON-RESTRICTIVE w/1320 ft. Signal Spacing
( ) 7 - BOTH MEDIAN TYPES

TRAFFIC

	YEAR	AADT
OPENING	2020	73,000
INTERIM	2030	80,000
DESIGN	2040	88,000

DESIGN SPEED 60 MPH
POSTED SPEED 55 MPH

DISTRIBUTION

K	7.4
D	53.66
T_{24}	4.7%

CRITERIA

(X) NEW CONSTRUCTION / RECONSTRUCTION
( ) RRR INTERSTATE / FREEWAY
( ) RRR NON-INTERSTATE / FREEWAY
( ) TDLC / NEW CONSTRUCTION / RECONSTRUCTION
( ) TDLC / RRR
( ) MANUAL OF UNIFORM MINIMUM STANDARDS (FLORIDA GREENBOOK) (OFF-STATE HIGHWAY SYSTEM ONLY)

DESIGN SPEED APPROVALS

AK Brennan — 3/17/17
DISTRICT DESIGN ENGINEER — DATE

James Stitz — 4/10/17
DISTRICT TRAFFIC OPERATIONS ENGINEER — DATE

LIST ANY POTENTIAL EXCEPTIONS AND VARIATIONS RELATED TO TYPICAL SECTION ELEMENTS:

N/A

LIST MAJOR STRUCTURES LOCATION/DESCRIPTION - REQUIRING INDEPENDENT STRUCTURE DESIGN:

SR 536 (750324, 750323, 750322)

LIST MAJOR UTILITIES WITHIN PROJECT CORRIDOR:
GAS (CENTRAL FLORIDA GAS)
WATER (ORANGE COUNTY UTILITIES)
COMMUNICATIONS (BRIGHTHOUSE NETWORKS, COMCAST, LEVEL 3, VERIZON)
WASTEWATER (ORANGE COUNTY UTILITIES)
ELECTRIC (DUKE ENERGY DISTRIBUTION, DUKE ENERGY TRANSMISSION)

LIST OTHER INFORMATION PERTINENT TO DESIGN OF PROJECT:

N/A

PROJECT IDENTIFICATION

FINANCIAL PROJECT ID 432100-1-22-01 FEDERAL AID PROJECT NO. N/A COUNTY NAME ORANGE

SECTION NO. 75280 ROAD DESIGNATION SR 400 (I-4) LIMITS/MILEPOST MP 0.000 - 9.528

PROJECT DESCRIPTION WIDENING SR 400 (I-4) FROM WEST OF CR 532 TO WEST OF SR 435 KIRKMAN ROAD AND FROM 1 MILE EAST OF SR 434 TO 1/2 MILE EAST OF SR 472.

PROPOSED STRUCTURE TYPICAL SECTION

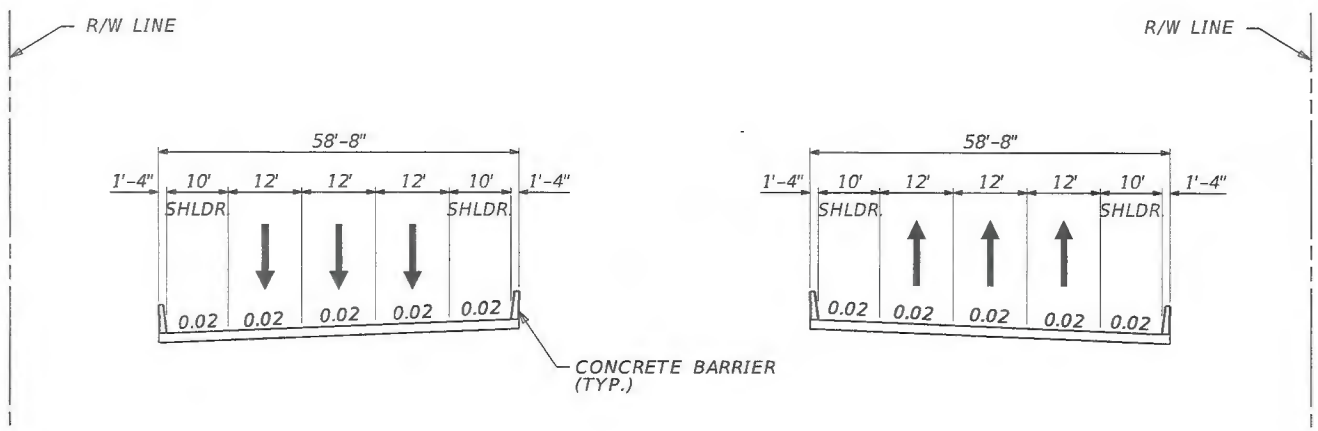

DESIGN SPEED = 60 MPH
SR 536 BRIDGE SECTION

SHEET 1B-15

APPROVED BY	FDOT CONCURRENCE	FHWA CONCURRENCE
2/9/17 ROBERT M. DENNEY, P.E. Date Engineer Of Record 58593	AK Brennan 3/17/17 ANNETTE K. BRENNAN, P.E. FDOT District Design Engineer Date	FHWA Transportation Engineer 1/17/18 Date

HNTB CORPORATION
610 CRESCENT EXEC. CT.
SUITE 400
LAKE MARY, FL 32746
(407) 805-0355
CERT OF AUTH NO 6500

ROBERT M. DENNEY LICENSE No. 58593 STATE OF FLORIDA PROFESSIONAL ENGINEER

PROJECT IDENTIFICATION

FINANCIAL PROJECT ID 432100-1-22-01 FEDERAL AID PROJECT NO. N/A COUNTY NAME ORANGE

SECTION NO. 75280 ROAD DESIGNATION SR 400 (I-4) LIMITS/MILEPOST MP 0.000 - 9.528

PROJECT DESCRIPTION WIDENING SR 400 (I-4) FROM WEST OF CR 532 TO WEST OF SR 435 KIRKMAN ROAD AND FROM 1 MILE EAST OF SR 434 TO 1/2 MILE EAST OF SR 472.

PROPOSED ROADWAY TYPICAL SECTION

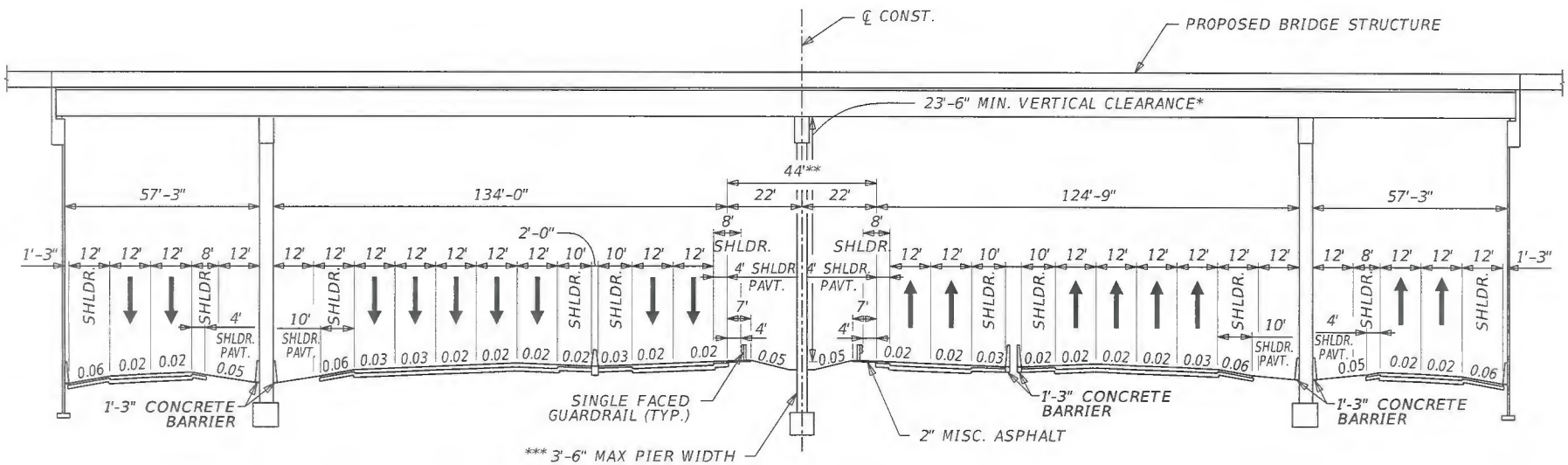

DESIGN SPEED = 70 MPH

SR 400 (I-4) UNDER SR 536 EASTBOUND RAMP

* VERTICAL CLEARANCE MEASURED FROM EXPRESS LANE INSIDE EDGE OF TRAVEL TO LOW MEMBER.

** 44' REQUIRED FOR FUTURE RAIL CORRIDOR. FUTURE RAIL CORRIDOR IS MEASURED FROM FACE OF FUTURE INSIDE BARRIER TO FACE OF FUTURE INSIDE BARRIER.

*** 3'-6" MAXIMUM PIER WIDTH ALLOWED.

SHEET 1B-16

APPROVED BY:	FDOT CONCURRENCE	FHWA CONCURRENCE
ROBERT M. DENNEY, P.E. Date Engineer Of Record 58593 HNTB CORPORATION 610 CRESCENT EXEC. CT. SUITE 400 LAKE MARY, FL 32746 (407) 805-0355 CERT OF AUTH NO 6500	ANNETTE K. BRENNAN, P.E. FDOT District Design Engineer 3/17/17 Date	FHWA Transportation Engineer 1/17/18 Date

ROBERT M. DENNEY LICENSE No. 58593 STATE OF FLORIDA PROFESSIONAL ENGINEER

PROJECT IDENTIFICATION

FINANCIAL PROJECT ID 432100-1-22-01 FEDERAL AID PROJECT NO. N/A COUNTY NAME ORANGE

SECTION NO. 75280 ROAD DESIGNATION SR 400 (I-4) LIMITS/MILEPOST MP 0.000 - 9.528

PROJECT DESCRIPTION WIDENING SR 400 (I-4) FROM WEST OF CR 532 TO WEST OF SR 435 KIRKMAN ROAD AND FROM 1 MILE EAST OF SR 434 TO 1/2 MILE EAST OF SR 472.

PROPOSED ROADWAY TYPICAL SECTION

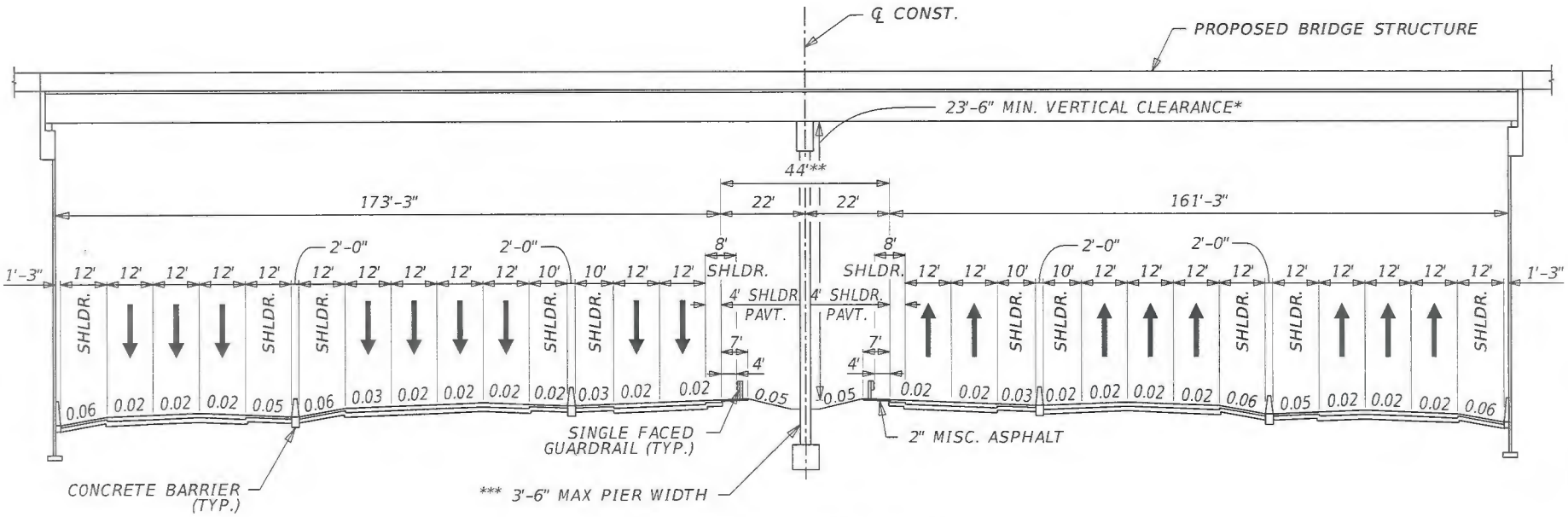

DESIGN SPEED = 70 MPH

SR 400 (I-4) UNDER SR 536 MAINLINE

* VERTICAL CLEARANCE MEASURED FROM EXPRESS LANE INSIDE EDGE OF TRAVEL TO LOW MEMBER.

** 44' REQUIRED FOR FUTURE RAIL CORRIDOR. FUTURE RAIL CORRIDOR IS MEASURED FROM FACE OF FUTURE INSIDE BARRIER TO FACE OF FUTURE INSIDE BARRIER.

*** 3'-6" MAXIMUM PIER WIDTH ALLOWED.

SHEET 1B-17

ROBERT M. DENNEY LICENSE No. 58593 STATE OF FLORIDA PROFESSIONAL ENGINEER

APPROVED BY	FDOT CONCURRENCE	FHWA CONCURRENCE
ROBERT M. DENNEY, P.E. Date Engineer Of Record 58593 HNTB CORPORATION 610 CRESCENT EXEC. CT. SUITE 400 LAKE MARY, FL 32746 (407) 805-0355 CERT OF AUTH NO 6500	ANNETTE K. BRENNAN, P.E. FDOT District Design Engineer 3/17/17 Date	FHWA Transportation Engineer 1/17/18 Date

mbacal 2/9/2017 2:38:49 PM \\LKMw00\pmwork3\Jobs\59219 - I4 SAMR\TECHPROD\Typical Section Package\TYPDRD01-SEG-1.DGN

PROJECT IDENTIFICATION

FINANCIAL PROJECT ID: 432100-1-22-01 COUNTY (SECTION): ORANGE (75280)

PROJECT DESCRIPTION: WIDENING SR 400 (I-4) FROM WEST OF CR 532 TO WEST OF SR 435 (KIRKMAN RD.) AND FROM 1 MILE EAST OF SR 434 TO 1/2 MILE EAST OF SR 472.

PROJECT CONTROLS (SR 535/APOPKA VINELAND ROAD)

FUNCTIONAL CLASSIFICATION

( ) RURAL
(X) URBAN

( ) FREEWAY/EXPWY. ( ) MAJOR COLL.
( ) PRINCIPAL ART. ( ) MINOR COLL.
(X) MINOR ART. ( ) LOCAL

HIGHWAY SYSTEM

Yes	No	
( )	(X)	NATIONAL HIGHWAY SYSTEM
( )	(X)	FLORIDA INTRASTATE HIGHWAY SYSTEM
( )	(X)	STRATEGIC INTERMODAL SYSTEM
(X)	( )	STATE HIGHWAY SYSTEM
( )	(X)	OFF STATE HIGHWAY SYSTEM

ACCESS CLASSIFICATION

( ) 1 - FREEWAY
( ) 2 - RESTRICTIVE w/Service Roads
(X) 3 - RESTRICTIVE w/660 ft. Connection Spacing
( ) 4 - NON-RESTRICTIVE w/2640 ft. Signal Spacing
( ) 5 - RESTRICTIVE w/440 ft. Connection Spacing
( ) 6 - NON-RESTRICTIVE w/1320 ft. Signal Spacing
( ) 7 - BOTH MEDIAN TYPES

TRAFFIC

	YEAR	AADT
OPENING	2020	79,000
INTERIM	2030	85,283
DESIGN	2040	96,000

DESIGN SPEED 45 MPH
POSTED SPEED 40 MPH

DISTRIBUTION

K	7.4
D	53.66
T_{24}	5.0%

CRITERIA

(X) NEW CONSTRUCTION / RECONSTRUCTION
( ) RRR INTERSTATE / FREEWAY
( ) RRR NON-INTERSTATE / FREEWAY
( ) TDLC / NEW CONSTRUCTION / RECONSTRUCTION
( ) TDLC / RRR
( ) MANUAL OF UNIFORM MINIMUM STANDARDS (FLORIDA GREENBOOK) (OFF-STATE HIGHWAY SYSTEM ONLY)

DESIGN SPEED APPROVALS

AK Brennan — 3/17/17
DISTRICT DESIGN ENGINEER — DATE

James Stryf — 4/10/17
DISTRICT TRAFFIC OPERATIONS ENGINEER — DATE

LIST ANY POTENTIAL EXCEPTIONS AND VARIATIONS RELATED TO TYPICAL SECTION ELEMENTS:

N/A

LIST MAJOR STRUCTURES LOCATION/DESCRIPTION - REQUIRING INDEPENDENT STRUCTURE DESIGN:

SR 535 (750367, 750368)

LIST MAJOR UTILITIES WITHIN PROJECT CORRIDOR:
GAS (CENTRAL FLORIDA GAS)
WATER (ORANGE COUNTY UTILITIES)
COMMUNICATIONS (BRIGHTHOUSE NETWORKS, COMCAST, LEVEL 3, VERIZON)
WASTEWATER (ORANGE COUNTY UTILITIES)
ELECTRIC (DUKE ENERGY DISTRIBUTION, DUKE ENERGY TRANSMISSION)

LIST OTHER INFORMATION PERTINENT TO DESIGN OF PROJECT:

N/A

PROJECT IDENTIFICATION

FINANCIAL PROJECT ID: 432100-1-22-01 COUNTY (SECTION): ORANGE (75280)

PROJECT DESCRIPTION: WIDENING SR 400 (I-4) FROM WEST OF CR 532 TO WEST OF SR 435 (KIRKMAN RD.) AND FROM 1 MILE EAST OF SR 434 TO 1/2 MILE EAST OF SR 472.

PROJECT CONTROLS (HOTEL PLAZA BOULEVARD)

FUNCTIONAL CLASSIFICATION

( ) RURAL
(X) URBAN

( ) FREEWAY/EXPWY. (X) MAJOR COLL.
( ) PRINCIPAL ART. ( ) MINOR COLL.
( ) MINOR ART. ( ) LOCAL

HIGHWAY SYSTEM

Yes	No	
( )	(X)	NATIONAL HIGHWAY SYSTEM
( )	(X)	FLORIDA INTRASTATE HIGHWAY SYSTEM
( )	(X)	STRATEGIC INTERMODAL SYSTEM
( )	(X)	STATE HIGHWAY SYSTEM
(X)	( )	OFF STATE HIGHWAY SYSTEM

ACCESS CLASSIFICATION

( ) 1 - FREEWAY
( ) 2 - RESTRICTIVE w/Service Roads
( ) 3 - RESTRICTIVE w/660 ft. Connection Spacing
( ) 4 - NON-RESTRICTIVE w/2640 ft. Signal Spacing
(X) 5 - RESTRICTIVE w/440 ft. Connection Spacing
( ) 6 - NON-RESTRICTIVE w/1320 ft. Signal Spacing
( ) 7 - BOTH MEDIAN TYPES

TRAFFIC

	YEAR	AADT
OPENING	2020	30,000
INTERIM	2030	33,000
DESIGN	2040	36,000

DESIGN SPEED 35 MPH
POSTED SPEED 35 MPH

DISTRIBUTION

K	7.4
D	53.66
T_{24}	6.0%

CRITERIA

(X) NEW CONSTRUCTION / RECONSTRUCTION
( ) RRR INTERSTATE / FREEWAY
( ) RRR NON-INTERSTATE / FREEWAY
( ) TDLC / NEW CONSTRUCTION / RECONSTRUCTION
( ) TDLC / RRR
( ) MANUAL OF UNIFORM MINIMUM STANDARDS (FLORIDA GREENBOOK) (OFF-STATE HIGHWAY SYSTEM ONLY)

DESIGN SPEED APPROVALS

AK Brennan 3/17/17
DISTRICT DESIGN ENGINEER DATE

James Stanley 4/10/17
DISTRICT TRAFFIC OPERATIONS ENGINEER DATE

LIST ANY POTENTIAL EXCEPTIONS AND VARIATIONS RELATED TO TYPICAL SECTION ELEMENTS:

N/A

LIST MAJOR STRUCTURES LOCATION/DESCRIPTION - REQUIRING INDEPENDENT STRUCTURE DESIGN:

HOTEL PLAZA BOULEVARD (PROPOSED)

LIST MAJOR UTILITIES WITHIN PROJECT CORRIDOR:
GAS (CENTRAL FLORIDA GAS)
WATER (ORANGE COUNTY UTILITIES)
COMMUNICATIONS (BRIGHTHOUSE NETWORKS, COMCAST, LEVEL 3, VERIZON)
WASTEWATER (ORANGE COUNTY UTILITIES)
ELECTRIC (DUKE ENERGY DISTRIBUTION, DUKE ENERGY TRANSMISSION)

LIST OTHER INFORMATION PERTINENT TO DESIGN OF PROJECT:

N/A

PROJECT IDENTIFICATION

FINANCIAL PROJECT ID: 432100-1-22-01 COUNTY (SECTION): ORANGE (75280)

PROJECT DESCRIPTION: WIDENING SR 400 (I-4) FROM WEST OF CR 532 TO WEST OF SR 435 (KIRKMAN RD.) AND FROM 1 MILE EAST OF SR 434 TO 1/2 MILE EAST OF SR 472.

PROJECT CONTROLS (VINELAND AVENUE)

FUNCTIONAL CLASSIFICATION

( ) RURAL
(X) URBAN

( ) FREEWAY/EXPWY. ( ) MAJOR COLL.
( ) PRINCIPAL ART. ( ) MINOR COLL.
(X) MINOR ART. ( ) LOCAL

HIGHWAY SYSTEM

Yes	No	
( )	(X)	NATIONAL HIGHWAY SYSTEM
( )	(X)	FLORIDA INTRASTATE HIGHWAY SYSTEM
( )	(X)	STRATEGIC INTERMODAL SYSTEM
( )	(X)	STATE HIGHWAY SYSTEM
(X)	( )	OFF STATE HIGHWAY SYSTEM

ACCESS CLASSIFICATION

( ) 1 - FREEWAY
( ) 2 - RESTRICTIVE w/Service Roads
( ) 3 - RESTRICTIVE w/660 ft. Connection Spacing
( ) 4 - NON-RESTRICTIVE w/2640 ft. Signal Spacing
(X) 5 - RESTRICTIVE w/440 ft. Connection Spacing
( ) 6 - NON-RESTRICTIVE w/1320 ft. Signal Spacing
( ) 7 - BOTH MEDIAN TYPES

TRAFFIC

	YEAR	AADT
OPENING	2020	29,000
INTERIM	2030	32,000
DESIGN	2040	35,000

DESIGN SPEED 35 MPH
POSTED SPEED 35 MPH

DISTRIBUTION

K	7.4
D	53.66
T_{24}	4.4%

CRITERIA

(X) NEW CONSTRUCTION / RECONSTRUCTION
( ) RRR INTERSTATE / FREEWAY
( ) RRR NON-INTERSTATE / FREEWAY
( ) TDLC / NEW CONSTRUCTION / RECONSTRUCTION
( ) TDLC / RRR
( ) MANUAL OF UNIFORM MINIMUM STANDARDS (FLORIDA GREENBOOK) (OFF-STATE HIGHWAY SYSTEM ONLY)

DESIGN SPEED APPROVALS

AK Brennan — 3/17/17
DISTRICT DESIGN ENGINEER — DATE

James Stroh — 4/10/17
DISTRICT TRAFFIC OPERATIONS ENGINEER — DATE

LIST ANY POTENTIAL EXCEPTIONS AND VARIATIONS RELATED TO TYPICAL SECTION ELEMENTS:

N/A

LIST MAJOR STRUCTURES LOCATION/DESCRIPTION - REQUIRING INDEPENDENT STRUCTURE DESIGN:

VINELAND AVENUE (PROPOSED)

LIST MAJOR UTILITIES WITHIN PROJECT CORRIDOR:
GAS (CENTRAL FLORIDA GAS)
WATER (ORANGE COUNTY UTILITIES)
COMMUNICATIONS (BRIGHTHOUSE NETWORKS, COMCAST, LEVEL 3, VERIZON)
WASTEWATER (ORANGE COUNTY UTILITIES)
ELECTRIC (DUKE ENERGY DISTRIBUTION, DUKE ENERGY TRANSMISSION)

LIST OTHER INFORMATION PERTINENT TO DESIGN OF PROJECT:

N/A

PROJECT IDENTIFICATION

FINANCIAL PROJECT ID: 432100-1-22-01 COUNTY (SECTION): ORANGE (75280)

PROJECT DESCRIPTION: WIDENING SR 400 (I-4) FROM WEST OF CR 532 TO WEST OF SR 435 (KIRKMAN RD.) AND FROM 1 MILE EAST OF SR 434 TO 1/2 MILE EAST OF SR 472.

PROJECT CONTROLS (PALM PARKWAY)

FUNCTIONAL CLASSIFICATION

( ) RURAL
(X) URBAN

( )	FREEWAY/EXPWY.	( )	MAJOR COLL.
( )	PRINCIPAL ART.	( )	MINOR COLL.
(X)	MINOR ART.	( )	LOCAL

HIGHWAY SYSTEM

Yes	No	
( )	(X)	NATIONAL HIGHWAY SYSTEM
( )	(X)	FLORIDA INTRASTATE HIGHWAY SYSTEM
( )	(X)	STRATEGIC INTERMODAL SYSTEM
( )	(X)	STATE HIGHWAY SYSTEM
(X)	( )	OFF STATE HIGHWAY SYSTEM

ACCESS CLASSIFICATION

( ) 1 - FREEWAY
( ) 2 - RESTRICTIVE w/Service Roads
( ) 3 - RESTRICTIVE w/660 ft. Connection Spacing
( ) 4 - NON-RESTRICTIVE w/2640 ft. Signal Spacing
(X) 5 - RESTRICTIVE w/440 ft. Connection Spacing
( ) 6 - NON-RESTRICTIVE w/1320 ft. Signal Spacing
( ) 7 - BOTH MEDIAN TYPES

TRAFFIC

	YEAR	AADT
OPENING	2020	32,000
INTERIM	2030	42,000
DESIGN	2040	52,000

DESIGN SPEED 30 MPH
POSTED SPEED 30 MPH

DISTRIBUTION

K	7.4
D	53.66
T_{24}	4.4%

CRITERIA

(X) NEW CONSTRUCTION / RECONSTRUCTION
( ) RRR INTERSTATE / FREEWAY
( ) RRR NON-INTERSTATE / FREEWAY
( ) TDLC / NEW CONSTRUCTION / RECONSTRUCTION
( ) TDLC / RRR
( ) MANUAL OF UNIFORM MINIMUM STANDARDS (FLORIDA GREENBOOK) (OFF-STATE HIGHWAY SYSTEM ONLY)

DESIGN SPEED APPROVALS

AK Brennan — 3/17/17
DISTRICT DESIGN ENGINEER — DATE

James A Stroz Jr — 4/10/17
DISTRICT TRAFFIC OPERATIONS ENGINEER — DATE

LIST ANY POTENTIAL EXCEPTIONS AND VARIATIONS RELATED TO TYPICAL SECTION ELEMENTS:

N/A

LIST MAJOR STRUCTURES LOCATION/DESCRIPTION - REQUIRING INDEPENDENT STRUCTURE DESIGN:

N/A

LIST MAJOR UTILITIES WITHIN PROJECT CORRIDOR:
GAS (CENTRAL FLORIDA GAS)
WATER (ORANGE COUNTY UTILITIES)
COMMUNICATIONS (BRIGHTHOUSE NETWORKS, COMCAST, LEVEL 3, VERIZON)
WASTEWATER (ORANGE COUNTY UTILITIES)
ELECTRIC (DUKE ENERGY DISTRIBUTION, DUKE ENERGY TRANSMISSION)

LIST OTHER INFORMATION PERTINENT TO DESIGN OF PROJECT:

N/A

PROJECT IDENTIFICATION

FINANCIAL PROJECT ID: 432100-1-22-01 COUNTY (SECTION): ORANGE (75280)

PROJECT DESCRIPTION: WIDENING SR 400 (I-4) FROM WEST OF CR 532 TO WEST OF SR 435 (KIRKMAN RD.) AND FROM 1 MILE EAST OF SR 434 TO 1/2 MILE EAST OF SR 472.

PROJECT CONTROLS (WINTER GARDEN VINELAND ROAD)

FUNCTIONAL CLASSIFICATION

( ) RURAL
(X) URBAN

( ) FREEWAY/EXPWY. (X) MAJOR COLL.
( ) PRINCIPAL ART. ( ) MINOR COLL.
( ) MINOR ART. ( ) LOCAL

HIGHWAY SYSTEM

Yes	No	
( )	(X)	NATIONAL HIGHWAY SYSTEM
( )	(X)	FLORIDA INTRASTATE HIGHWAY SYSTEM
( )	(X)	STRATEGIC INTERMODAL SYSTEM
( )	(X)	STATE HIGHWAY SYSTEM
(X)	( )	OFF STATE HIGHWAY SYSTEM

ACCESS CLASSIFICATION

( ) 1 - FREEWAY
( ) 2 - RESTRICTIVE w/Service Roads
( ) 3 - RESTRICTIVE w/660 ft. Connection Spacing
( ) 4 - NON-RESTRICTIVE w/2640 ft. Signal Spacing
(X) 5 - RESTRICTIVE w/440 ft. Connection Spacing
( ) 6 - NON-RESTRICTIVE w/1320 ft. Signal Spacing
( ) 7 - BOTH MEDIAN TYPES

TRAFFIC

	YEAR	AADT
OPENING	2020	44,000
INTERIM	2030	52,000
DESIGN	2040	59,000

DESIGN SPEED 35 MPH
POSTED SPEED 35 MPH

DISTRIBUTION

K	7.4
D	53.66
T_{24}	4.9%

CRITERIA

(X) NEW CONSTRUCTION / RECONSTRUCTION
( ) RRR INTERSTATE / FREEWAY
( ) RRR NON-INTERSTATE / FREEWAY
( ) TDLC / NEW CONSTRUCTION / RECONSTRUCTION
( ) TDLC / RRR
( ) MANUAL OF UNIFORM MINIMUM STANDARDS (FLORIDA GREENBOOK) (OFF-STATE HIGHWAY SYSTEM ONLY)

DESIGN SPEED APPROVALS

AK Brennan — 3/17/17
DISTRICT DESIGN ENGINEER — DATE

[illegible] — 4/10/17
DISTRICT TRAFFIC OPERATIONS ENGINEER — DATE

LIST ANY POTENTIAL EXCEPTIONS AND VARIATIONS RELATED TO TYPICAL SECTION ELEMENTS:

N/A

LIST MAJOR STRUCTURES LOCATION/DESCRIPTION - REQUIRING INDEPENDENT STRUCTURE DESIGN:

N/A

LIST MAJOR UTILITIES WITHIN PROJECT CORRIDOR:
GAS (CENTRAL FLORIDA GAS)
WATER (ORANGE COUNTY UTILITIES)
COMMUNICATIONS (BRIGHTHOUSE NETWORKS, COMCAST, LEVEL 3, VERIZON)
WASTEWATER (ORANGE COUNTY UTILITIES)
ELECTRIC (DUKE ENERGY DISTRIBUTION, DUKE ENERGY TRANSMISSION)

LIST OTHER INFORMATION PERTINENT TO DESIGN OF PROJECT:

N/A

PROJECT IDENTIFICATION

FINANCIAL PROJECT ID: 432100-1-22-01 COUNTY (SECTION): ORANGE (75280)

PROJECT DESCRIPTION: WIDENING SR 400 (I-4) FROM WEST OF CR 532 TO WEST OF SR 435 (KIRKMAN RD.) AND FROM 1 MILE EAST OF SR 434 TO 1/2 MILE EAST OF SR 472.

PROJECT CONTROLS (GRAND CYPRESS BOULEVARD)

FUNCTIONAL CLASSIFICATION

( ) RURAL
(X) URBAN

( ) FREEWAY/EXPWY. ( ) MAJOR COLL.
( ) PRINCIPAL ART. (X) MINOR COLL.
( ) MINOR ART. ( ) LOCAL

HIGHWAY SYSTEM

Yes	No	
( )	(X)	NATIONAL HIGHWAY SYSTEM
( )	(X)	FLORIDA INTRASTATE HIGHWAY SYSTEM
( )	(X)	STRATEGIC INTERMODAL SYSTEM
( )	(X)	STATE HIGHWAY SYSTEM
(X)	( )	OFF STATE HIGHWAY SYSTEM

ACCESS CLASSIFICATION

( ) 1 - FREEWAY
( ) 2 - RESTRICTIVE w/Service Roads
( ) 3 - RESTRICTIVE w/660 ft. Connection Spacing
( ) 4 - NON-RESTRICTIVE w/2640 ft. Signal Spacing
(X) 5 - RESTRICTIVE w/440 ft. Connection Spacing
( ) 6 - NON-RESTRICTIVE w/1320 ft. Signal Spacing
( ) 7 - BOTH MEDIAN TYPES

TRAFFIC

	YEAR	AADT
OPENING	2020	16,000
INTERIM	2030	19,000
DESIGN	2040	22,000

DESIGN SPEED 30 MPH
POSTED SPEED 30 MPH

DISTRIBUTION

K	7.4
D	53.66
T_{24}	4.9%

CRITERIA

(X) NEW CONSTRUCTION / RECONSTRUCTION
( ) RRR INTERSTATE / FREEWAY
( ) RRR NON-INTERSTATE / FREEWAY
( ) TDLC / NEW CONSTRUCTION / RECONSTRUCTION
( ) TDLC / RRR
( ) MANUAL OF UNIFORM MINIMUM STANDARDS (FLORIDA GREENBOOK) (OFF-STATE HIGHWAY SYSTEM ONLY)

DESIGN SPEED APPROVALS

AK Brennan — 3/17/17
DISTRICT DESIGN ENGINEER — DATE

James Stutz Jr — 4/10/17
DISTRICT TRAFFIC OPERATIONS ENGINEER — DATE

LIST ANY POTENTIAL EXCEPTIONS AND VARIATIONS RELATED TO TYPICAL SECTION ELEMENTS:

N/A

LIST MAJOR STRUCTURES LOCATION/DESCRIPTION - REQUIRING INDEPENDENT STRUCTURE DESIGN:

N/A

LIST MAJOR UTILITIES WITHIN PROJECT CORRIDOR:
GAS (CENTRAL FLORIDA GAS)
WATER (ORANGE COUNTY UTILITIES)
COMMUNICATIONS (BRIGHTHOUSE NETWORKS, COMCAST, LEVEL 3, VERIZON)
WASTEWATER (ORANGE COUNTY UTILITIES)
ELECTRIC (DUKE ENERGY DISTRIBUTION, DUKE ENERGY TRANSMISSION)

LIST OTHER INFORMATION PERTINENT TO DESIGN OF PROJECT:

N/A

PROJECT IDENTIFICATION

FINANCIAL PROJECT ID 432100-1-22-01 FEDERAL AID PROJECT NO. N/A COUNTY NAME ORANGE

SECTION NO. 75280 ROAD DESIGNATION SR 400 (I-4) LIMITS/MILEPOST MP 0.000 - 9.528

PROJECT DESCRIPTION WIDENING SR 400 (I-4) FROM WEST OF CR 532 TO WEST OF SR 435 KIRKMAN ROAD AND FROM 1 MILE EAST OF SR 434 TO 1/2 MILE EAST OF SR 472.

PROPOSED ROADWAY TYPICAL SECTION

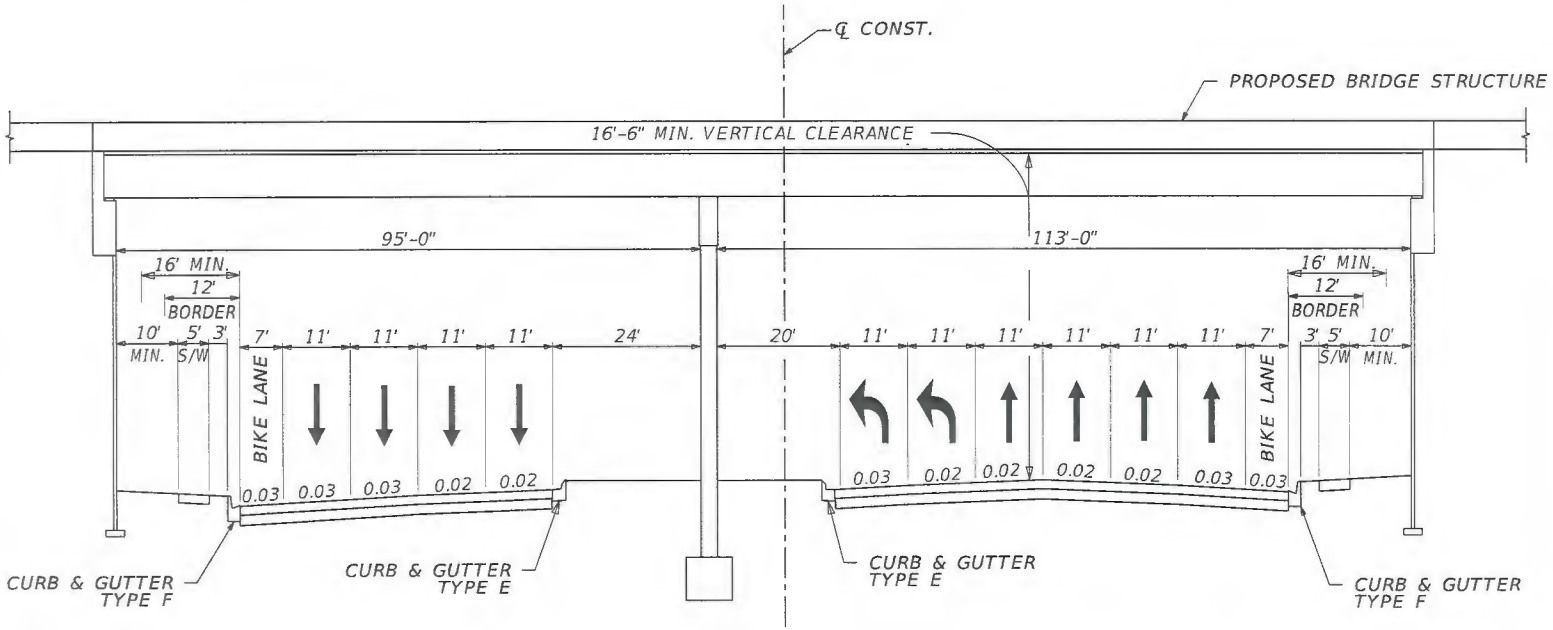

DESIGN SPEED = 45 MPH

SR 535 ROADWAY SECTION UNDER SR 400 (I-4)

SHEET 1B-24

ROBERT M. DENNEY LICENSE No. 58593 STATE OF FLORIDA PROFESSIONAL ENGINEER

ROBERT M. DENNEY, P.E. Date
Engineer Of Record 58593

HNTB CORPORATION
610 CRESCENT EXEC. CT.
SUITE 400
LAKE MARY, FL 32746
(407) 805-0355
CERT OF AUTH NO 6500

FDOT CONCURRENCE	FHWA CONCURRENCE
AK Brennan 3/17/17	1/17/18
ANNETTE K. BRENNAN, P.E. FDOT District Design Engineer — Date	FHWA Transportation Engineer — Date

mbacal 2/9/2017 2:38:53 PM \\LKMw00\pmwork3\Jobs\59219 - I4 SAMR\TECHPROD\Typical Section Package\TYPDRD01-SEG-1.DGN

PROJECT IDENTIFICATION

FINANCIAL PROJECT ID 432100-1-22-01 FEDERAL AID PROJECT NO. N/A COUNTY NAME ORANGE

SECTION NO. 75280 ROAD DESIGNATION SR 400 (I-4) LIMITS/MILEPOST MP 0.000 - 9.528

PROJECT DESCRIPTION WIDENING SR 400 (I-4) FROM WEST OF CR 532 TO WEST OF SR 435 KIRKMAN ROAD AND FROM 1 MILE EAST OF SR 434 TO 1/2 MILE EAST OF SR 472.

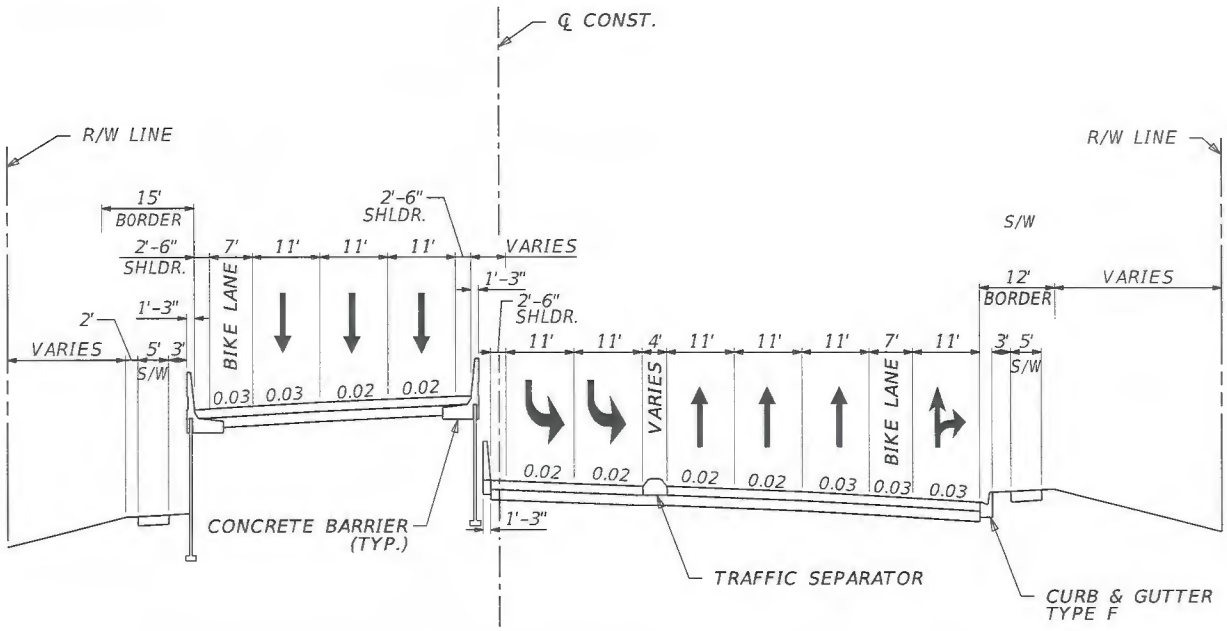

DESIGN SPEED = 45 MPH

SR 535 ROADWAY SECTION WITH ELEVATED SB

SHEET 1B-25

ROBERT M. DENNEY LICENSE No. 58593 STATE OF FLORIDA PROFESSIONAL ENGINEER

2/9/17

ROBERT M. DENNEY, P.E. Date
Engineer Of Record 58593

HNTB CORPORATION
610 CRESCENT EXEC. CT.
SUITE 400
LAKE MARY, FL 32746
(407) 805-0355
CERT OF AUTH NO 6500

FDOT CONCURRENCE		FHWA CONCURRENCE	
A K Brennan	3/17/17		1/17/18
ANNETTE K. BRENNAN, P.E. FDOT District Design Engineer	Date	FHWA Transportation Engineer	Date

PROJECT IDENTIFICATION

FINANCIAL PROJECT ID 432100-1-22-01 FEDERAL AID PROJECT NO. N/A COUNTY NAME ORANGE

SECTION NO. 75280 ROAD DESIGNATION SR 400 (I-4) LIMITS/MILEPOST MP 0.000 - 9.528

PROJECT DESCRIPTION WIDENING SR 400 (I-4) FROM WEST OF CR 532 TO WEST OF SR 435 KIRKMAN ROAD AND FROM 1 MILE EAST OF SR 434 TO 1/2 MILE EAST OF SR 472.

PROPOSED ROADWAY TYPICAL SECTION

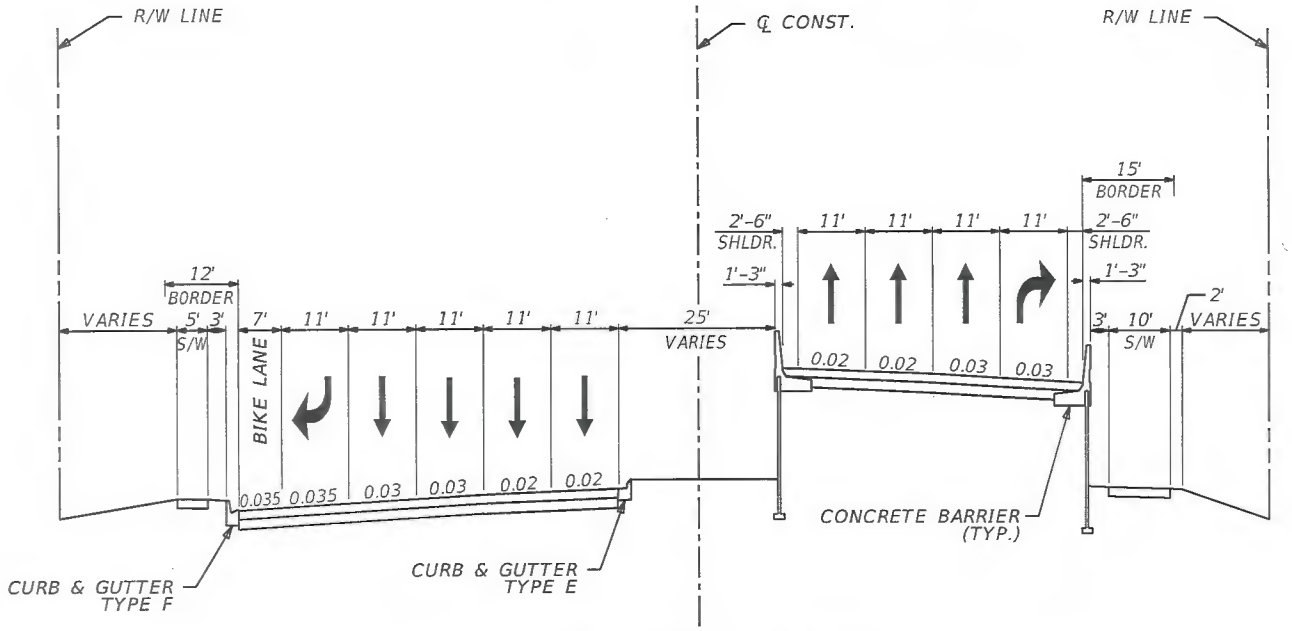

DESIGN SPEED = 45 MPH

APOPKA VINELAND ROAD ROADWAY SECTION WITH ELEVATED NB

SHEET 1B-26

ROBERT M. DENNEY LICENSE No. 58593 STATE OF FLORIDA PROFESSIONAL ENGINEER

	FDOT CONCURRENCE	FHWA CONCURRENCE	COUNTY CONCURRENCE
ROBERT M. DENNEY, P.E. Date Engineer Of Record 58593	MARIO BIZZIO, P.E. FDOT District Design Engineer 10/2/17 Date	FHWA Transportation Engineer 1/18/18 Date	County Engineer 11-14-17 Date

HNTB CORPORATION
610 CRESCENT EXEC. CT.
SUITE 400
LAKE MARY, FL 32746
(407) 805-0355
CERT OF AUTH NO 6500

mbacal 9/20/2017 1:00:18 PM \\LKMw00\pmwork3\Jobs\59219 - I4 SAMR\TECHPROD\Typical Section Package\TYPDRD01-SEG-1.DGN

PROJECT IDENTIFICATION

FINANCIAL PROJECT ID 432100-1-22-01 FEDERAL AID PROJECT NO. N/A COUNTY NAME ORANGE

SECTION NO. 92130 ROAD DESIGNATION SR 400 (I-4) LIMITS/MILEPOST MP 0.000 - 7.885

PROJECT DESCRIPTION WIDENING SR 400 (I-4) FROM WEST OF CR 532 TO WEST OF SR 435 KIRKMAN ROAD AND FROM 1 MILE EAST OF SR 434 TO 1/2 MILE EAST OF SR 472.

PROPOSED STRUCTURE TYPICAL SECTION

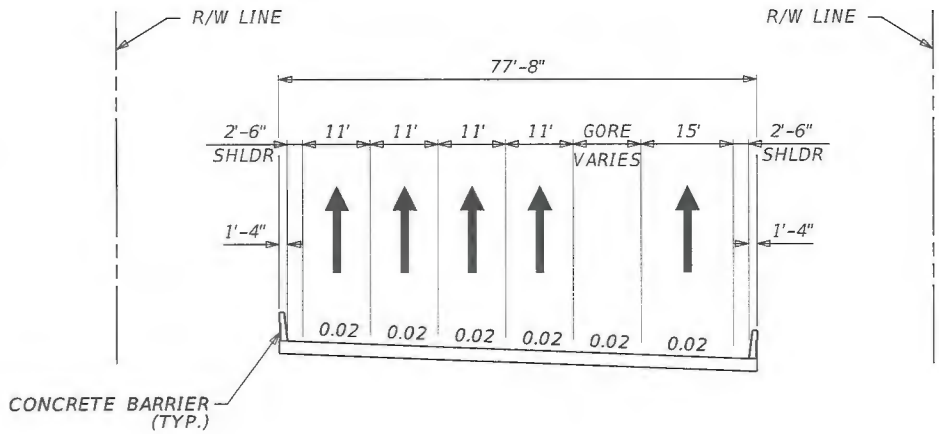

DESIGN SPEED = 45 MPH

APOPKA VINELAND ROAD NB BRIDGE SECTION OVER HOTEL PLAZA

SHEET 1B-27

APPROVED BY	FDOT CONCURRENCE	FHWA CONCURRENCE	COUNTY CONCURRENCE
HNTB CORPORATION 610 CRESCENT EXEC. CT. SUITE 400 LAKE MARY, FL 32746 (407) 805-0355 CERT OF AUTH NO 6500 ROBERT M. DENNEY, P.E. Date Engineer of Record 58593	ANNETTE K. BRENNAN, P.E. FDOT District Design Engineer 3/17/17 Date	FHWA Transportation Engineer 1/18/18 Date	County Engineer 8-14-17 Date

ROBERT M. DENNEY LICENSE No. 58593 STATE OF FLORIDA PROFESSIONAL ENGINEER

mbacal 2/9/2012 2:38:54 PM \\LKMw00\pmwork3\Jobs\59219 - I4 SAMR\TECHPROD\Typical Section Package\TYPDRD01-SEG-1.DGN

PROJECT IDENTIFICATION

FINANCIAL PROJECT ID 432100-1-22-01 FEDERAL AID PROJECT NO. N/A COUNTY NAME ORANGE

SECTION NO. 92130 ROAD DESIGNATION SR 400 (I-4) LIMITS/MILEPOST MP 0.000 - 7.885

PROJECT DESCRIPTION WIDENING SR 400 (I-4) FROM WEST OF CR 532 TO WEST OF SR 435 KIRKMAN ROAD AND FROM 1 MILE EAST OF SR 434 TO 1/2 MILE EAST OF SR 472.

PROPOSED STRUCTURE TYPICAL SECTION

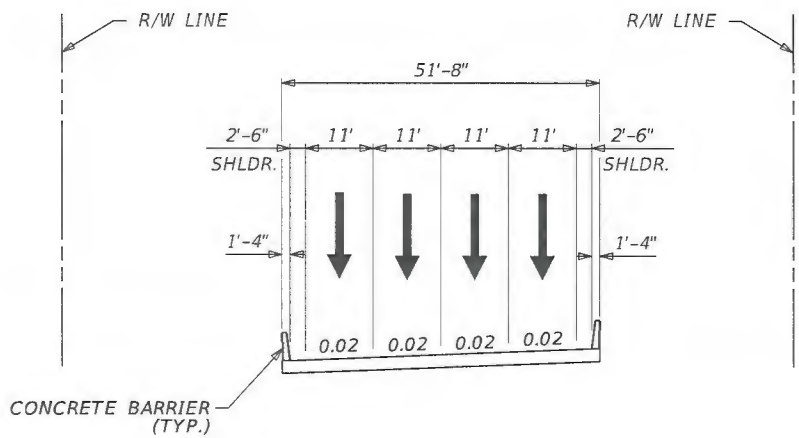

DESIGN SPEED = 45 MPH

SR 535 SB BRIDGE SECTION OVER VINELAND AVENUE

SHEET 1B-28

APPROVED BY	FDOT CONCURRENCE	FHWA CONCURRENCE	COUNTY CONCURRENCE
ROBERT M. DENNEY, P.E. Engineer Of Record 58593 — 2/9/17 Date HNTB CORPORATION 610 CRESCENT EXEC. CT. SUITE 400 LAKE MARY, FL 32746 (407) 805-0355 CERT OF AUTH NO 6500	ANNETTE K. BRENNAN, P.E. FDOT District Design Engineer 3/17/17 Date	FHWA Transportation Engineer 1/17/18 Date	County Engineer 8-14-17 Date

ROBERT M. DENNEY LICENSE No. 58593 STATE OF FLORIDA PROFESSIONAL ENGINEER

mbacal 2/9/2017 2:38:55 PM \\LKMw00\pmwork3\Jobs\59219 - I4 SAMR\TECHPROD\Typical Section Package\TYPDRD01-SEG-1.DGN

PROJECT IDENTIFICATION

FINANCIAL PROJECT ID 432100-1-22-01 FEDERAL AID PROJECT NO. N/A COUNTY NAME ORANGE

SECTION NO. 75280 ROAD DESIGNATION SR 400 (I-4) LIMITS/MILEPOST MP 0.000 - 9.528

PROJECT DESCRIPTION WIDENING SR 400 (I-4) FROM WEST OF CR 532 TO WEST OF SR 435 KIRKMAN ROAD AND FROM 1 MILE EAST OF SR 434 TO 1/2 MILE EAST OF SR 472.

PROPOSED ROADWAY TYPICAL SECTION

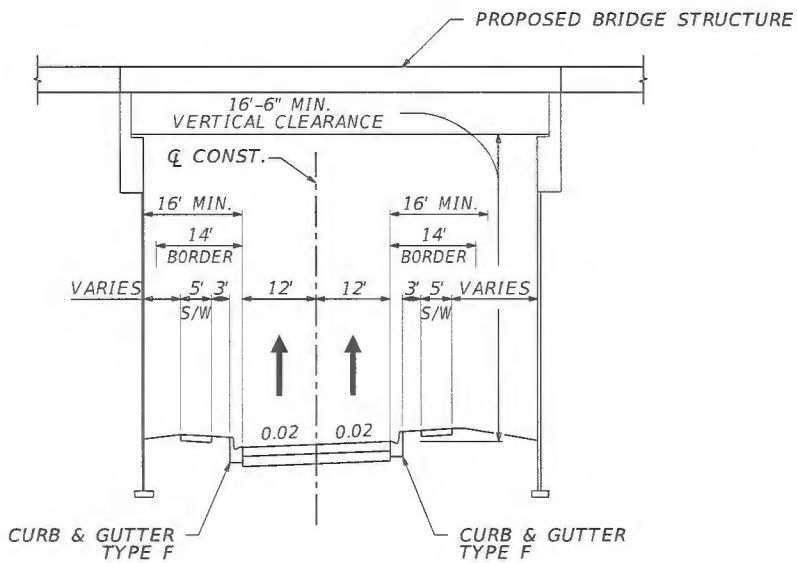

DESIGN SPEED = 45 MPH

HOTEL PLAZA LOOP RAMP UNDER APOPKA VINELAND ROAD NB

SHEET 1B-29

	FDOT CONCURRENCE	FHWA CONCURRENCE
ROBERT M. DENNEY, P.E. Date Engineer Of Record 58593 HNTB CORPORATION 610 CRESCENT EXEC. CT. SUITE 400 LAKE MARY, FL 32746 (407) 805-0355 CERT OF AUTH NO 6500	ANNETTE K. BRENNAN, P.E. FDOT District Design Engineer 3/17/17 Date	FHWA Transportation Engineer 1/17/18 Date

ROBERT M. DENNEY LICENSE NO. 58593 STATE OF FLORIDA PROFESSIONAL ENGINEER 2/9/17

mbaeal 2/9/2017 2:38:55 PM \\LKMw00\pmwork3\Jobs\59219 - I4 SAMR\TECHPROD\Typical Section Package\TYPDRD01-SEG-1.DGN

PROJECT IDENTIFICATION

FINANCIAL PROJECT ID 432100-1-22-01 FEDERAL AID PROJECT NO. N/A COUNTY NAME ORANGE

SECTION NO. 75280 ROAD DESIGNATION SR 400 (I-4) LIMITS/MILEPOST MP 0.000 - 9.528

PROJECT DESCRIPTION WIDENING SR 400 (I-4) FROM WEST OF CR 532 TO WEST OF SR 435 KIRKMAN ROAD AND FROM 1 MILE EAST OF SR 434 TO 1/2 MILE EAST OF SR 472.

PROPOSED ROADWAY TYPICAL SECTION

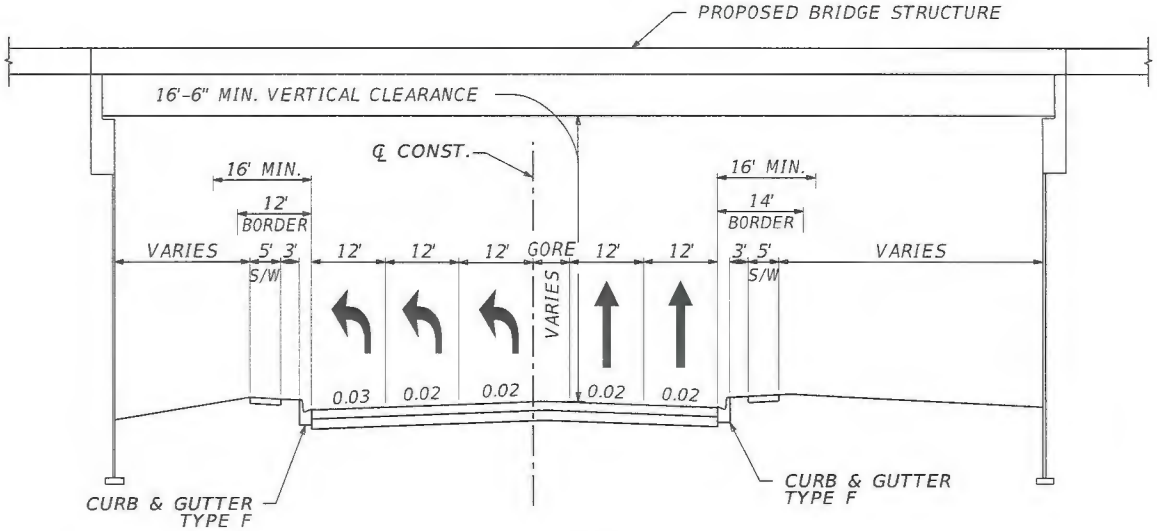

DESIGN SPEED = 45 MPH

SR 400 (I-4) EB OFF RAMP UNDER SR 535 SB

SHEET 1B-30

ROBERT M. DENNEY LICENSE No. 58593 STATE OF FLORIDA PROFESSIONAL ENGINEER

ROBERT M. DENNEY, P.E. Date
Engineer Of Record 58593

HNTB CORPORATION
610 CRESCENT EXEC. CT.
SUITE 400
LAKE MARY, FL 32746
(407) 805-0355
CERT OF AUTH NO 6500

FDOT CONCURRENCE

AK Brennan 3/17/17
ANNETTE K. BRENNAN, P.E. Date
FDOT District Design Engineer

FHWA CONCURRENCE

1/17/18
FHWA Transportation Engineer Date

mbacal 2/9/2017 2:38:56 PM \\LKMw00\pmwork3\Jobs\59219 - I4 SAMR\TECHPROD\Typical Section Package\TYPDRD01-SEG-1.DGN

PROJECT IDENTIFICATION

FINANCIAL PROJECT ID 432100-1-22-01 FEDERAL AID PROJECT NO. N/A COUNTY NAME ORANGE

SECTION NO. 75280 ROAD DESIGNATION SR 400 (I-4) LIMITS/MILEPOST MP 0.000 - 9.528

PROJECT DESCRIPTION WIDENING SR 400 (I-4) FROM WEST OF CR 532 TO WEST OF SR 435 KIRKMAN ROAD AND FROM 1 MILE EAST OF SR 434 TO 1/2 MILE EAST OF SR 472.

PROPOSED ROADWAY TYPICAL SECTION

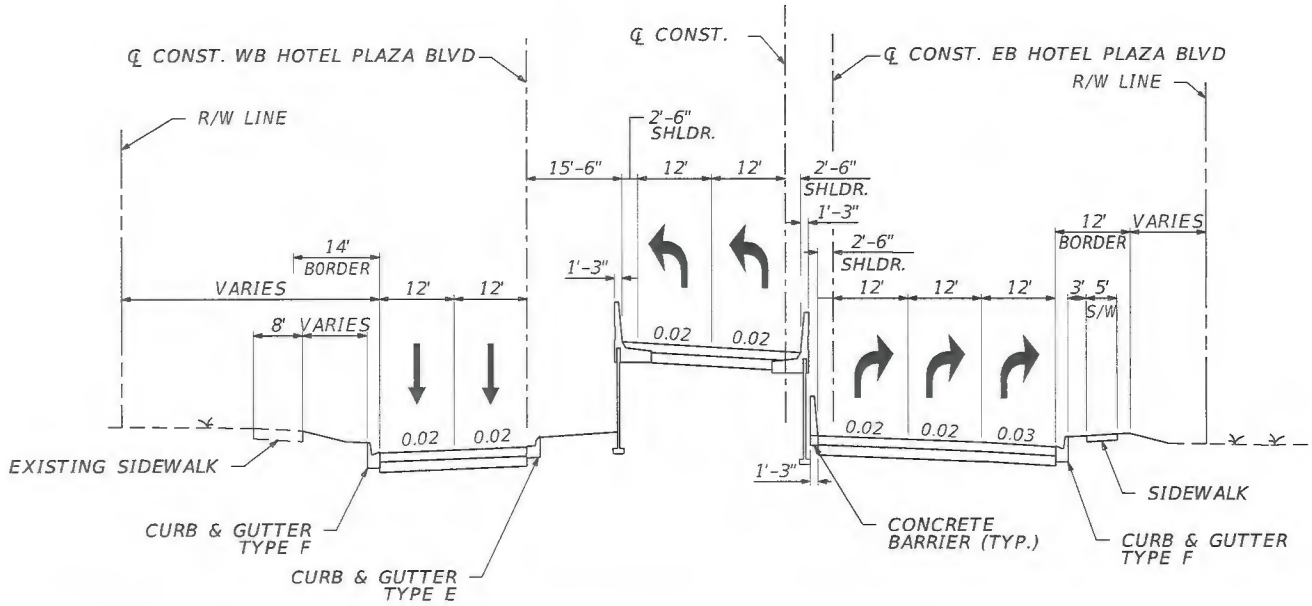

DESIGN SPEED = 35 MPH

HOTEL PLAZA BOULEVARD - ELEVATED LEFT TURNS

SHEET 1B-31

	FDOT CONCURRENCE	FHWA CONCURRENCE
ROBERT M. DENNEY, P.E. Engineer Of Record 58593 — Date 2/9/17	ANNETTE K. BRENNAN, P.E. FDOT District Design Engineer — Date 3/17/17	FHWA Transportation Engineer — Date 1/12/18

HNTB CORPORATION
610 CRESCENT EXEC. CT.
SUITE 400
LAKE MARY, FL 32746
(407) 805-0355
CERT OF AUTH NO 6500

ROBERT M. DENNEY LICENSE NO. 58593 STATE OF FLORIDA PROFESSIONAL ENGINEER

mbacal 2/9/2017 2:38:56 PM \\LKMw00\pmwork3\Jobs\59219 - I4 SAMR\TECHPROD\Typical Section Package\TYPDRD01-SEG-1.DGN

PROJECT IDENTIFICATION

FINANCIAL PROJECT ID 432100-1-22-01 FEDERAL AID PROJECT NO. N/A COUNTY NAME ORANGE

SECTION NO. 75280 ROAD DESIGNATION SR 400 (I-4) LIMITS/MILEPOST MP 0.000 - 9.528

PROJECT DESCRIPTION WIDENING SR 400 (I-4) FROM WEST OF CR 532 TO WEST OF SR 435 KIRKMAN ROAD AND FROM 1 MILE EAST OF SR 434 TO 1/2 MILE EAST OF SR 472.

PROPOSED ROADWAY TYPICAL SECTION

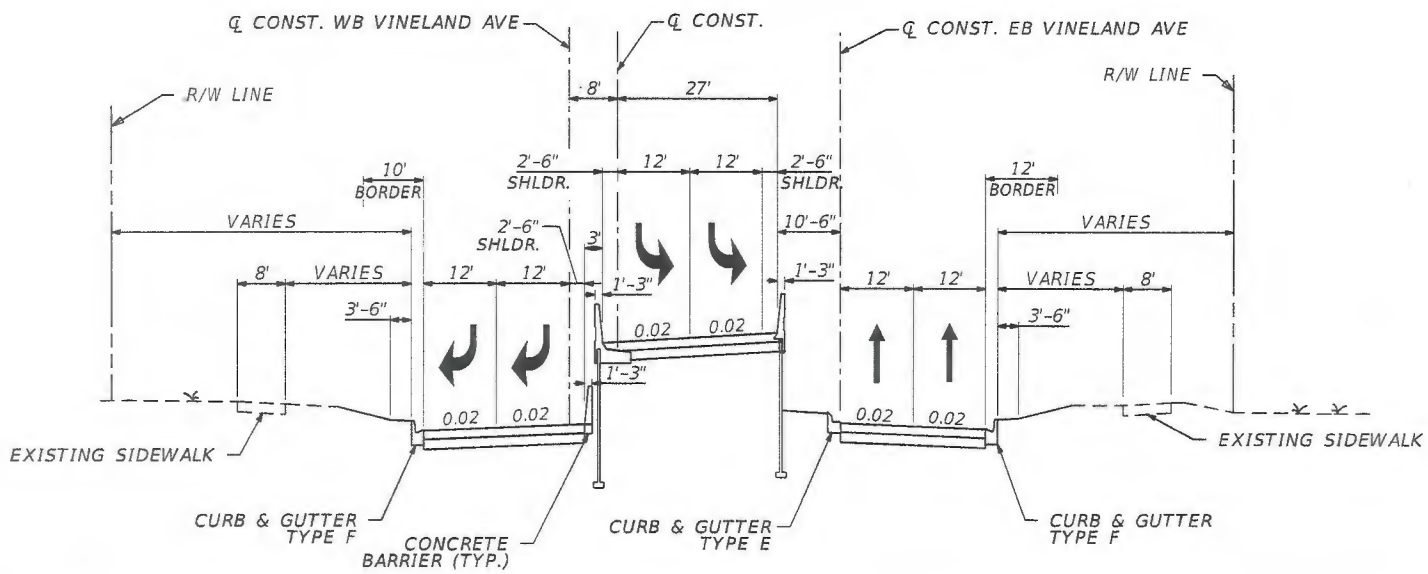

DESIGN SPEED = 35 MPH

VINELAND AVENUE ROADWAY SECTION

SHEET 1B-32

	FDOT CONCURRENCE	FHWA CONCURRENCE	COUNTY CONCURRENCE
ROBERT M. DENNEY, P.E. Date Engineer Of Record 58593 HNTB CORPORATION 410 CRESCENT EXEC. CT. SUITE 400 LAKE MARY, FL 32746 (407) 805-0355 CERT OF AUTH NO 6500	MARIO BIZZIO, P.E. FDOT District Design Engineer 6/2/17 Date	FHWA Transportation Engineer 1/17/18 Date	County Engineer 8-14-17 Date

ROBERT M. DENNEY LICENSE No. 58593 STATE OF FLORIDA PROFESSIONAL ENGINEER

amourad 6/1/2017 3:02:48 PM \\LKMw00\pmwork3\Jobs\59219 - 14 SAMR\TECHPROD\Typical Section Package\TYPDRD01-SEG-1.DGN

PROJECT IDENTIFICATION

FINANCIAL PROJECT ID 432100-1-22-01 FEDERAL AID PROJECT NO. N/A COUNTY NAME ORANGE

SECTION NO. 92130 ROAD DESIGNATION SR 400 (I-4) LIMITS/MILEPOST MP 0.000 - 7.885

PROJECT DESCRIPTION WIDENING SR 400 (I-4) FROM WEST OF CR 532 TO WEST OF SR 435 KIRKMAN ROAD AND FROM 1 MILE EAST OF SR 434 TO 1/2 MILE EAST OF SR 472.

PROPOSED STRUCTURE TYPICAL SECTION

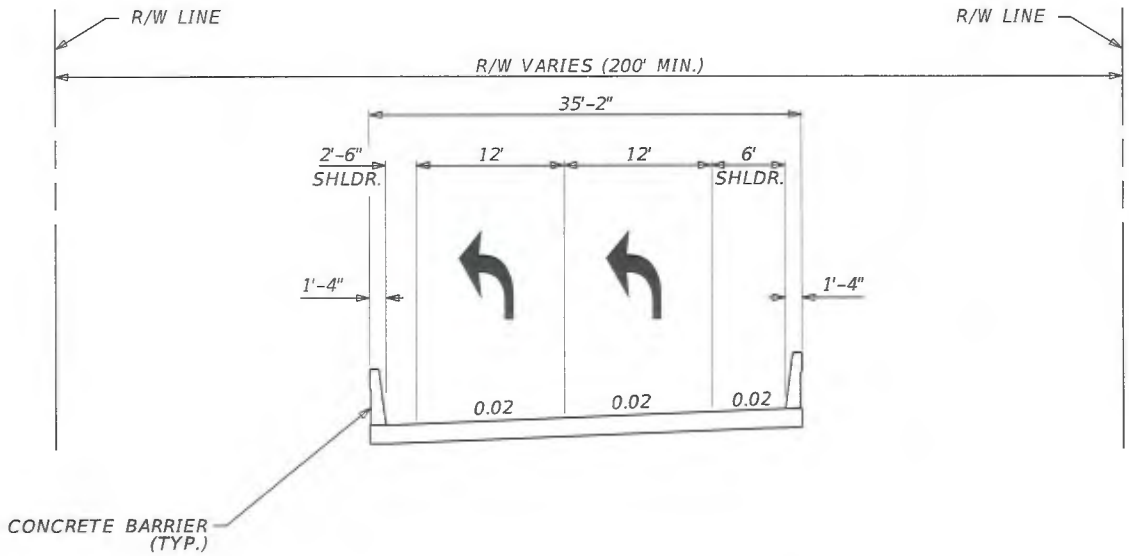

DESIGN SPEED = 35 MPH
HOTEL PLAZA BOULEVARD LEFT TURN
FLYOVER OVER APOPKA VINELAND ROAD SB

SHEET 1B-33

APPROVED BY	FDOT CONCURRENCE	FHWA CONCURRENCE
ROBERT M. DENNEY, P.E. Date Engineer Of Record 58593 HNTB CORPORATION 610 CRESCENT EXEC. CT. SUITE 400 LAKE MARY, FL 32746 (407) 805-0355 CERT OF AUTH NO 6500	ANNETTE K. BRENNAN, P.E. 3/17/17 Date FDOT District Design Engineer	FHWA Transportation Engineer 1/17/18 Date

ROBERT M. DENNEY LICENSE No. 58593 STATE OF FLORIDA PROFESSIONAL ENGINEER

mbacal 2/9/2017 2:38:57 PM \\LKMw00\pmwork3\Jobs\59219 - I4 SAMR\TECHPROD\Typical Section Package\TYPDRD01-SEG-1.DGN

PROJECT IDENTIFICATION

FINANCIAL PROJECT ID 432100-1-22-01 FEDERAL AID PROJECT NO. N/A COUNTY NAME ORANGE

SECTION NO. 92130 ROAD DESIGNATION SR 400 (I-4) LIMITS/MILEPOST MP 0.000 - 7.885

PROJECT DESCRIPTION WIDENING SR 400 (I-4) FROM WEST OF CR 532 TO WEST OF SR 435 KIRKMAN ROAD AND FROM 1 MILE EAST OF SR 434 TO 1/2 MILE EAST OF SR 472.

PROPOSED STRUCTURE TYPICAL SECTION

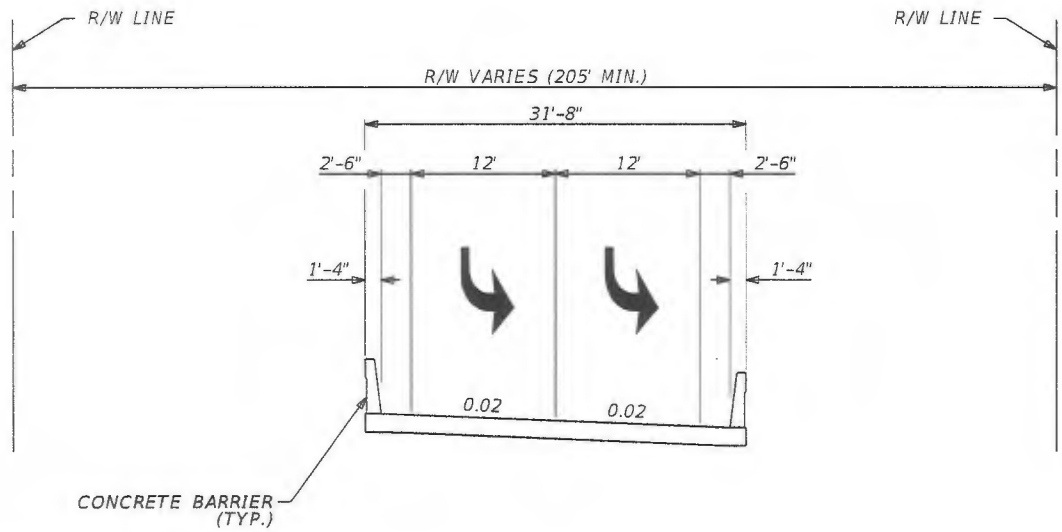

DESIGN SPEED = 35 MPH
VINELAND AVENUE LEFT TURN
FLYOVER OVER SR 535 NB

SHEET 1B-34

APPROVED BY	FDOT CONCURRENCE	FHWA CONCURRENCE	COUNTY CONCURRENCE
ROBERT M. DENNEY, P.E. Date 6/1/17 Engineer of Record 58593	MARIO BIZZIO, P.E. FDOT District Design Engineer 6/2/17 Date	FHWA Transportation Engineer 1/17/18 Date	County Engineer 8-14-17 Date

HNTB CORPORATION
5810 CRESCENT EXEC. CT.
SUITE 400
LAKE MARY, FL 32746
(407) 805-0355
CERT OF AUTH NO 6500

ROBERT M. DENNEY LICENSE No. 58593 STATE OF FLORIDA PROFESSIONAL ENGINEER

amourad 6/1/2017 2:34:22 PM \\LKMw00\pmwork3\Jobs\59219 - 14 SAMR\TECHPROD\Typical Section Package\TYPDRD01-SEG-1.DGN

PROJECT IDENTIFICATION

FINANCIAL PROJECT ID 432100-1-22-01 FEDERAL AID PROJECT NO. N/A COUNTY NAME ORANGE

SECTION NO. 75280 ROAD DESIGNATION SR 400 (I-4) LIMITS/MILEPOST MP 0.000 - 9.528

PROJECT DESCRIPTION WIDENING SR 400 (I-4) FROM WEST OF CR 532 TO WEST OF SR 435 KIRKMAN ROAD AND FROM 1 MILE EAST OF SR 434 TO 1/2 MILE EAST OF SR 472.

PROPOSED ROADWAY TYPICAL SECTION

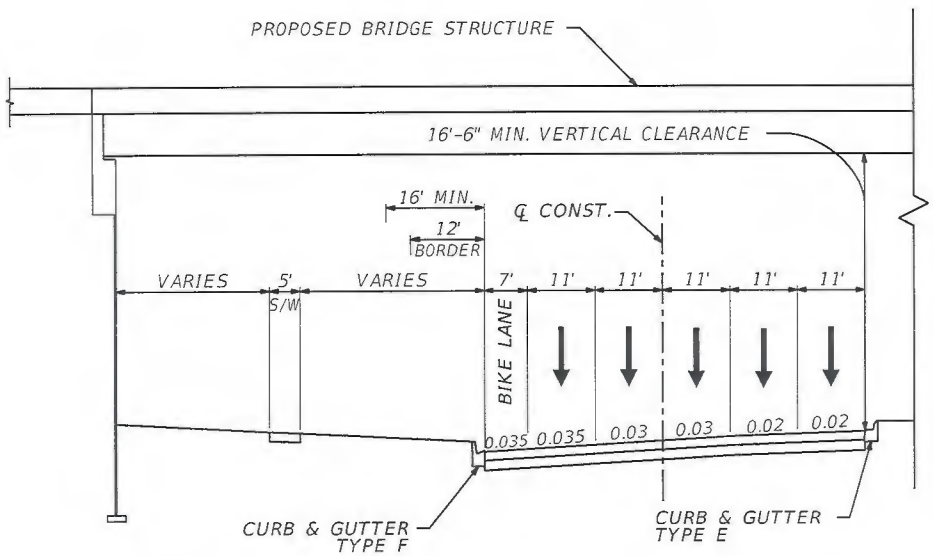

DESIGN SPEED = 45 MPH

APOPKA VINELAND ROAD SB ROADWAY SECTION UNDER HOTEL PLAZA BOULEVARD BRIDGE

SHEET 1B-35

	FDOT CONCURRENCE	FHWA CONCURRENCE	COUNTY CONCURRENCE
ROBERT M. DENNEY, P.E. Engineer Of Record 58593 — Date 11-14-17	MARIO BIZZIO, P.E. FDOT District Design Engineer — Date 10/2/17	FHWA Transportation Engineer — Date 1/17/18	County Engineer — Date 11-14-17
HNTB CORPORATION 610 CRESCENT EXEC. CT. SUITE 400 LAKE MARY, FL 32746 (407) 805-0355 CERT OF AUTH NO 6500			

ROBERT M. DENNEY LICENSE No. 58593 STATE OF FLORIDA PROFESSIONAL ENGINEER

PROJECT IDENTIFICATION

FINANCIAL PROJECT ID 432100-1-22-01 FEDERAL AID PROJECT NO. N/A COUNTY NAME ORANGE

SECTION NO. 75280 ROAD DESIGNATION SR 400 (I-4) LIMITS/MILEPOST MP 0.000 - 9.528

PROJECT DESCRIPTION WIDENING SR 400 (I-4) FROM WEST OF CR 532 TO WEST OF SR 435 KIRKMAN ROAD AND FROM 1 MILE EAST OF SR 434 TO 1/2 MILE EAST OF SR 472.

PROPOSED ROADWAY TYPICAL SECTION

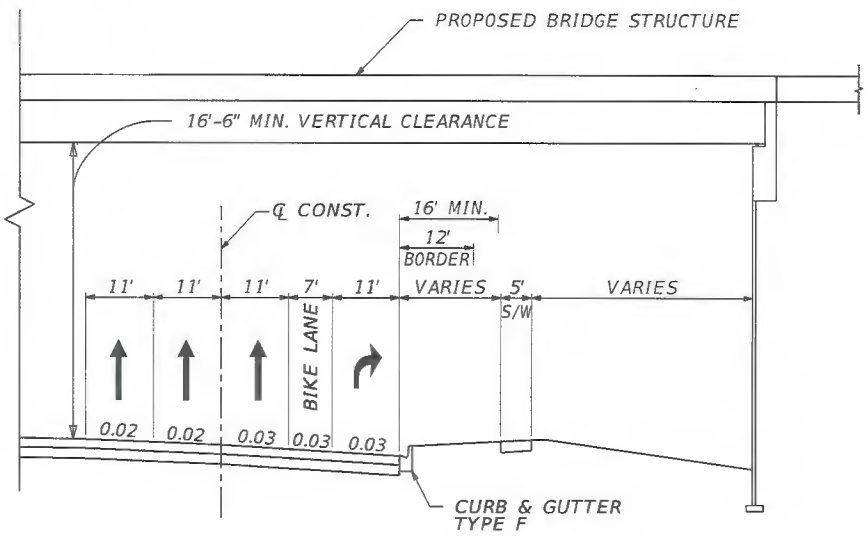

DESIGN SPEED = 45 MPH

SR 535 NB ROADWAY UNDER VINELAND AVENUE BRIDGE

SHEET 1B-36

	FDOT CONCURRENCE	FHWA CONCURRENCE
ROBERT M. DENNEY LICENSE No. 58593 STATE OF FLORIDA PROFESSIONAL ENGINEER 2/9/17 ROBERT M. DENNEY, P.E. Date Engineer Of Record 58593 HNTB CORPORATION 610 CRESCENT EXEC. CT. SUITE 400 LAKE MARY, FL 32746 (407) 805-0355 CERT OF AUTH NO 6500	A K Brennan 3/17/17 ANNETTE K. BRENNAN, P.E. Date FDOT District Design Engineer	1/17/18 FHWA Transportation Engineer Date

PROJECT IDENTIFICATION

FINANCIAL PROJECT ID 432100-1-22-01 FEDERAL AID PROJECT NO. N/A COUNTY NAME ORANGE

SECTION NO. 75280 ROAD DESIGNATION SR 400 (I-4) LIMITS/MILEPOST MP 0.000 - 9.528

PROJECT DESCRIPTION WIDENING SR 400 (I-4) FROM WEST OF CR 532 TO WEST OF SR 435 KIRKMAN ROAD AND FROM 1 MILE EAST OF SR 434 TO 1/2 MILE EAST OF SR 472.

PROPOSED ROADWAY TYPICAL SECTION

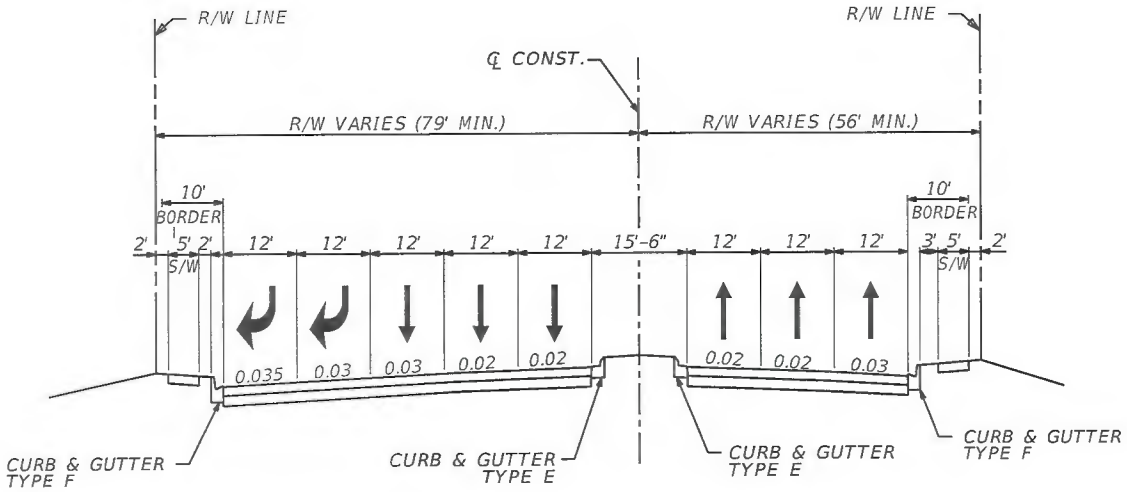

DESIGN SPEED = 30 MPH

PALM PARKWAY ROADWAY SECTION

SHEET 1B-37

ROBERT M. DENNEY LICENSE No. 58593 STATE OF FLORIDA PROFESSIONAL ENGINEER

ROBERT M. DENNEY, P.E. Date
Engineer Of Record 58593

HNTB CORPORATION
610 CRESCENT EXEC. CT.
SUITE 400
LAKE MARY, FL 32746
(407) 805-0355
CERT OF AUTH NO 6500

FDOT CONCURRENCE	FHWA CONCURRENCE	COUNTY CONCURRENCE
MARIO BIZZIO, P.E. FDOT District Design Engineer 10/2/17 Date	FHWA Transportation Engineer 11/7/18 Date	County Engineer 11-14-17 Date

PROJECT IDENTIFICATION

FINANCIAL PROJECT ID 432100-1-22-01 FEDERAL AID PROJECT NO. N/A COUNTY NAME ORANGE

SECTION NO. 75280 ROAD DESIGNATION SR 400 (I-4) LIMITS/MILEPOST MP 0.000 - 9.528

PROJECT DESCRIPTION WIDENING SR 400 (I-4) FROM WEST OF CR 532 TO WEST OF SR 435 KIRKMAN ROAD AND FROM 1 MILE EAST OF SR 434 TO 1/2 MILE EAST OF SR 472.

PROPOSED ROADWAY TYPICAL SECTION

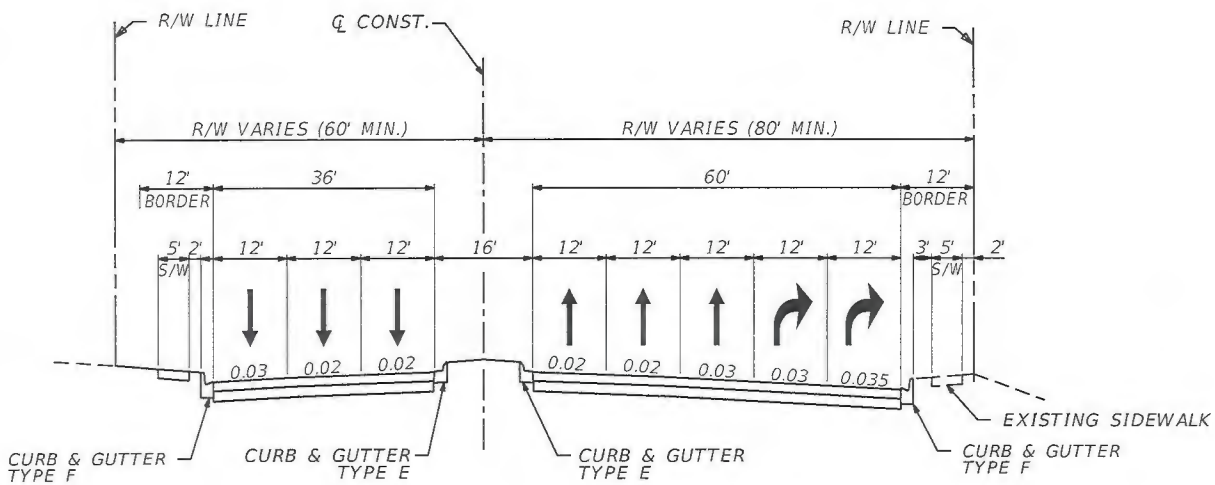

DESIGN SPEED = 35 MPH

WINTER GARDEN VINELAND ROAD ROADWAY SECTION

SHEET 1B-38

	FDOT CONCURRENCE	FHWA CONCURRENCE	COUNTY CONCURRENCE
ROBERT M. DENNEY, P.E. Engineer Of Record 58593 Date 10/2/17	MARIO BIZZIO, P.E. FDOT District Design Engineer 10/2/17 Date	FHWA Transportation Engineer 1/12/18 Date	County Engineer 11-14-17 Date

HNTB CORPORATION
610 CRESCENT EXEC. CT.
SUITE 400
LAKE MARY, FL 32746
(407) 805-0355
CERT OF AUTH NO 6500

ROBERT M. DENNEY LICENSE No. 58593 STATE OF FLORIDA PROFESSIONAL ENGINEER

mbacal 9/20/2017 1:01:35 PM \\LKMw00\pmwork3\Jobs\59219 - I4 SAMR\TECHPROD\Typical Section Package\TYPDRD01-SEG-1.DGN

PROJECT IDENTIFICATION

FINANCIAL PROJECT ID 432100-1-22-01 FEDERAL AID PROJECT NO. N/A COUNTY NAME ORANGE

SECTION NO. 75280 ROAD DESIGNATION SR 400 (I-4) LIMITS/MILEPOST MP 0.000 - 9.528

PROJECT DESCRIPTION WIDENING SR 400 (I-4) FROM WEST OF CR 532 TO WEST OF SR 435 KIRKMAN ROAD AND FROM 1 MILE EAST OF SR 434 TO 1/2 MILE EAST OF SR 472.

PROPOSED ROADWAY TYPICAL SECTION

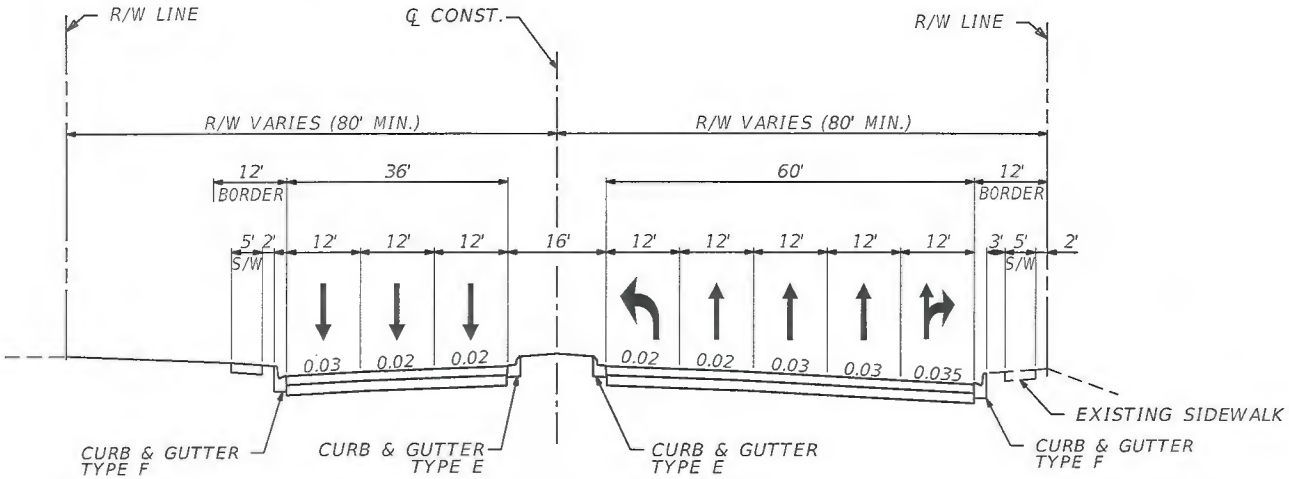

DESIGN SPEED = 35 MPH
WINTER GARDEN VINELAND ROAD ROADWAY SECTION
(WEST OF GRAND CYPRESS BOULEVARD)

SHEET 1B-38A

ROBERT M. DENNEY LICENSE No. 58593 STATE OF FLORIDA PROFESSIONAL ENGINEER

		FDOT CONCURRENCE	FHWA CONCURRENCE	COUNTY CONCURRENCE
ROBERT M. DENNEY, P.E. Engineer Of Record 58593 11-21-17 Date	HNTB CORPORATION 610 CRESCENT EXEC. CT. SUITE 400 LAKE MARY, FL 32746 (407) 805-0355 CERT OF AUTH NO 6500	MARIO BIZZIO, P.E. FDOT District Design Engineer 10/2/17 Date	FHWA Transportation Engineer 1/17/18 Date	County Engineer 11-14-17 Date

mbacal 9/20/2017 1:01:48 PM \\LKMw00\pmwork3\Jobs\59219 - I4 SAMR\TECHPROD\Typical Section Package\TYPDRD01-SEG-1.DGN

PROJECT IDENTIFICATION

FINANCIAL PROJECT ID 432100-1-22-01 FEDERAL AID PROJECT NO. N/A COUNTY NAME ORANGE

SECTION NO. 75280 ROAD DESIGNATION SR 400 (I-4) LIMITS/MILEPOST MP 0.000 - 9.528

PROJECT DESCRIPTION WIDENING SR 400 (I-4) FROM WEST OF CR 532 TO WEST OF SR 435 KIRKMAN ROAD AND FROM 1 MILE EAST OF SR 434 TO 1/2 MILE EAST OF SR 472.

PROPOSED ROADWAY TYPICAL SECTION

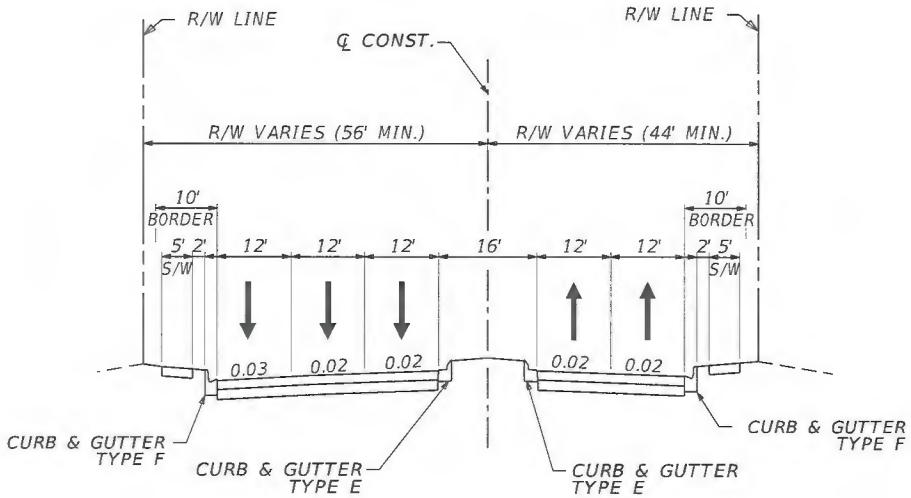

DESIGN SPEED = 30 MPH

GRAND CYPRESS BOULEVARD ROADWAY SECTION

SHEET 1B-39

ROBERT M. DENNEY LICENSE No. 58593 STATE OF FLORIDA PROFESSIONAL ENGINEER

	FDOT CONCURRENCE	FHWA CONCURRENCE
2/9/17 Date ROBERT M. DENNEY, P.E. Engineer Of Record 58593	AK Brennan 3/17/17 ANNETTE K. BRENNAN, P.E. FDOT District Design Engineer Date	1/12/18 FHWA Transportation Engineer Date

HNTB CORPORATION
610 CRESCENT EXEC. CT.
SUITE 400
LAKE MARY, FL 32746
(407) 805-0355
CERT OF AUTH NO 6500

mbacal 2/9/2017 2:39:06 PM \\LKMw00\pmwork3\Jobs\59219 - I4 SAMR\TECHPROD\Typical Section Package\TYPDRD01-SEG-1.DGN

PROJECT IDENTIFICATION

FINANCIAL PROJECT ID 432100-1-22-01 FEDERAL AID PROJECT NO. N/A COUNTY NAME ORANGE

SECTION NO. 75280 ROAD DESIGNATION SR 400 (I-4) LIMITS/MILEPOST MP 0.000 - 9.528

PROJECT DESCRIPTION WIDENING SR 400 (I-4) FROM WEST OF CR 532 TO WEST OF SR 435 KIRKMAN ROAD AND FROM 1 MILE EAST OF SR 434 TO 1/2 MILE EAST OF SR 472.

PROPOSED ROADWAY TYPICAL SECTION

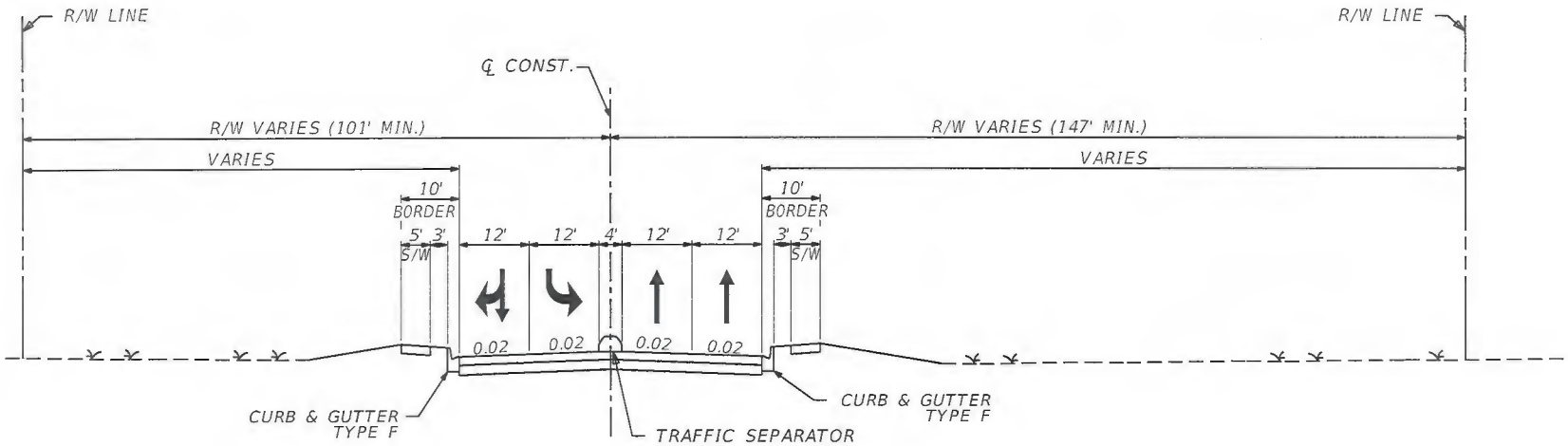

DESIGN SPEED = 30 MPH
VININGS WAY BOULEVARD ROADWAY SECTION
(EAST OF APOPKA VINELAND ROAD/CR 435)

SHEET 1B-40

		FDOT CONCURRENCE	FHWA CONCURRENCE	COUNTY CONCURRENCE
ROBERT M. DENNEY, P.E. Engineer Of Record 58593 — 10-31-17 Date	HNTB CORPORATION 610 CRESCENT EXEC. CT. SUITE 400 LAKE MARY, FL 32746 (407) 805-0355 CERT OF AUTH NO 6500	MARIO BIZZIO, P.E. FDOT District Design Engineer — 10/2/17 Date	FHWA Transportation Engineer — 1/17/18 Date	County Engineer — 11-14-17 Date

ROBERT M. DENNEY LICENSE No. 58593 STATE OF FLORIDA PROFESSIONAL ENGINEER

PROJECT IDENTIFICATION

FINANCIAL PROJECT ID 432100-1-22-01 FEDERAL AID PROJECT NO. N/A COUNTY NAME ORANGE

SECTION NO. 75280 ROAD DESIGNATION SR 400 (I-4) LIMITS/MILEPOST MP 0.000 - 9.528

PROJECT DESCRIPTION WIDENING SR 400 (I-4) FROM WEST OF CR 532 TO WEST OF SR 435 KIRKMAN ROAD AND FROM 1 MILE EAST OF SR 434 TO 1/2 MILE EAST OF SR 472.

PROPOSED ROADWAY TYPICAL SECTION

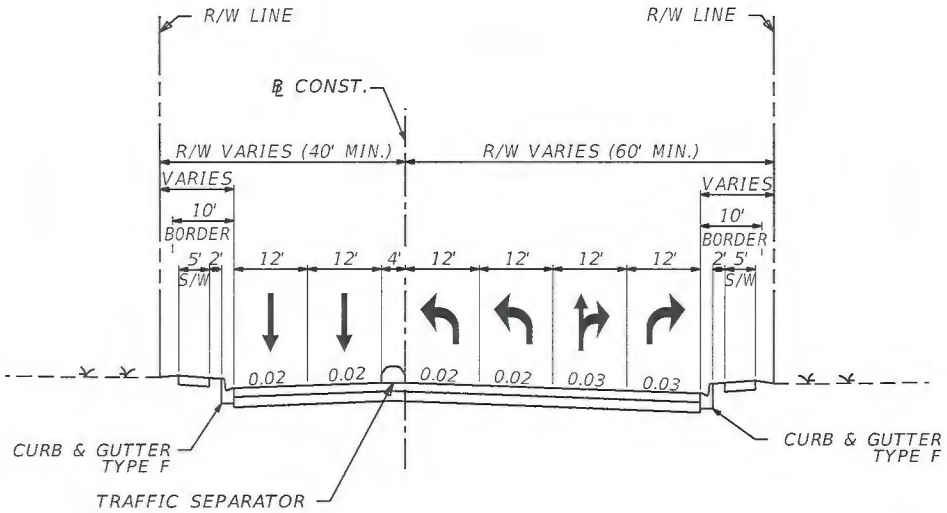

DESIGN SPEED = 30 MPH
VININGS WAY BOULEVARD ROADWAY SECTION
(WEST OF APOPKA VINELAND ROAD/CR 435)

SHEET 1B-40A

ROBERT M. DENNEY LICENSE No. 58593 STATE OF FLORIDA PROFESSIONAL ENGINEER

ROBERT M. DENNEY, P.E. Date Engineer Of Record 58593	HNTB CORPORATION 610 CRESCENT EXEC. CT. SUITE 400 LAKE MARY, FL 32746 (407) 805-0355 CERT OF AUTH NO 6500	FDOT CONCURRENCE MARIO BIZZIO, P.E. FDOT District Design Engineer 10/2/17 Date	FHWA CONCURRENCE FHWA Transportation Engineer 1/12/18 Date	COUNTY CONCURRENCE County Engineer 11-14-17 Date

PROJECT IDENTIFICATION

FINANCIAL PROJECT ID 432100-1-22-01 FEDERAL AID PROJECT NO. N/A COUNTY NAME ORANGE

SECTION NO. 75280 ROAD DESIGNATION SR 400 (I-4) LIMITS/MILEPOST MP 0.000 - 9.528

PROJECT DESCRIPTION WIDENING SR 400 (I-4) FROM WEST OF CR 532 TO WEST OF SR 435 KIRKMAN ROAD AND FROM 1 MILE EAST OF SR 434 TO 1/2 MILE EAST OF SR 472.

PROPOSED ROADWAY TYPICAL SECTION

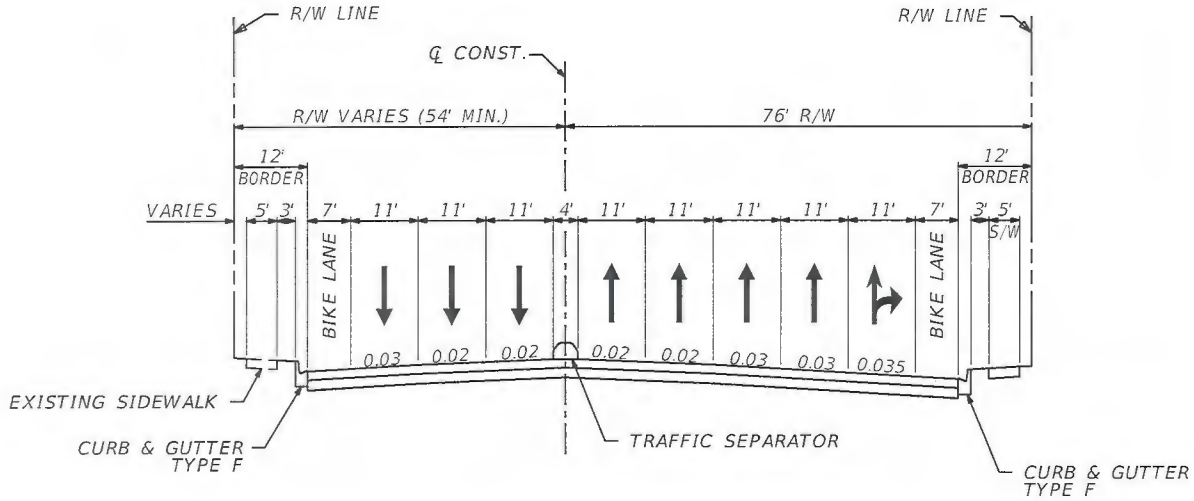

DESIGN SPEED = 45 MPH

APOPKA VINELAND ROAD/CR 435 ROADWAY SECTION

SHEET 1B-41

ROBERT M. DENNEY LICENSE No. 58593 STATE OF FLORIDA PROFESSIONAL ENGINEER

	FDOT CONCURRENCE	FHWA CONCURRENCE	COUNTY CONCURRENCE
ROBERT M. DENNEY, P.E. Engineer Of Record 58593 Date 9-22-17	MARIO BIZZIO, P.E. FDOT District Design Engineer 10/2/17 Date	FHWA Transportation Engineer 11/17/18 Date	County Engineer 11-14-17 Date

HNTB CORPORATION
610 CRESCENT EXEC. CT.
SUITE 400
LAKE MARY, FL 32746
(407) 805-0355
CERT OF AUTH NO 6500

mbacal 9/20/2017 1:02:10 PM \\LKMw00\pmwork3\Jobs\59219 - I4 SAMR\TECHPROD\Typical Section Package\TYPDRD01-SEG-1.DGN

PROJECT IDENTIFICATION

FINANCIAL PROJECT ID: 432100-1-22-01 COUNTY (SECTION): ORANGE (75280)

PROJECT DESCRIPTION: WIDENING SR 400 (I-4) FROM WEST OF CR 532 TO WEST OF SR 435 (KIRKMAN RD.) AND FROM 1 MILE EAST OF SR 434 TO 1/2 MILE EAST OF SR 472.

PROJECT CONTROLS (DARYL CARTER PARKWAY)

FUNCTIONAL CLASSIFICATION

( ) RURAL
(X) URBAN

( ) FREEWAY/EXPWY. ( ) MAJOR COLL.
( ) PRINCIPAL ART. ( ) MINOR COLL.
(X) MINOR ART. ( ) LOCAL

HIGHWAY SYSTEM

Yes	No	
( )	(X)	NATIONAL HIGHWAY SYSTEM
( )	(X)	FLORIDA INTRASTATE HIGHWAY SYSTEM
( )	(X)	STRATEGIC INTERMODAL SYSTEM
( )	(X)	STATE HIGHWAY SYSTEM
(X)	( )	OFF STATE HIGHWAY SYSTEM

ACCESS CLASSIFICATION

( ) 1 - FREEWAY
( ) 2 - RESTRICTIVE w/Service Roads
( ) 3 - RESTRICTIVE w/660 ft. Connection Spacing
( ) 4 - NON-RESTRICTIVE w/2640 ft. Signal Spacing
(X) 5 - RESTRICTIVE w/440 ft. Connection Spacing
( ) 6 - NON-RESTRICTIVE w/1320 ft. Signal Spacing
( ) 7 - BOTH MEDIAN TYPES

TRAFFIC

	YEAR	AADT
OPENING	2020	27,000
INTERIM	2030	30,000
DESIGN	2040	34,000

DESIGN SPEED 40 MPH
POSTED SPEED 40 MPH

DISTRIBUTION

K	7.4
D	53.66
T_{24}	10.8%

CRITERIA

(X) NEW CONSTRUCTION / RECONSTRUCTION
( ) RRR INTERSTATE / FREEWAY
( ) RRR NON-INTERSTATE / FREEWAY
( ) TDLC / NEW CONSTRUCTION / RECONSTRUCTION
( ) TDLC / RRR
( ) MANUAL OF UNIFORM MINIMUM STANDARDS (FLORIDA GREENBOOK) (OFF-STATE HIGHWAY SYSTEM ONLY)

DESIGN SPEED APPROVALS

AK Brennan — DISTRICT DESIGN ENGINEER — DATE 3/17/17

James Stutzer — DISTRICT TRAFFIC OPERATIONS ENGINEER — DATE 4/10/17

LIST ANY POTENTIAL EXCEPTIONS AND VARIATIONS RELATED TO TYPICAL SECTION ELEMENTS:

N/A

LIST MAJOR STRUCTURES LOCATION/DESCRIPTION - REQUIRING INDEPENDENT STRUCTURE DESIGN:

DARYL CARTER PARKWAY (754115)

LIST MAJOR UTILITIES WITHIN PROJECT CORRIDOR:
GAS (CENTRAL FLORIDA GAS)
WATER (ORANGE COUNTY UTILITIES)
COMMUNICATIONS (BRIGHTHOUSE NETWORKS, COMCAST, LEVEL 3, VERIZON)
WASTEWATER (ORANGE COUNTY UTILITIES)
ELECTRIC (DUKE ENERGY DISTRIBUTION, DUKE ENERGY TRANSMISSION)

LIST OTHER INFORMATION PERTINENT TO DESIGN OF PROJECT:

N/A

PROJECT IDENTIFICATION

FINANCIAL PROJECT ID 432100-1-22-01 FEDERAL AID PROJECT NO. N/A COUNTY NAME ORANGE

SECTION NO. 75280 ROAD DESIGNATION SR 400 (I-4) LIMITS/MILEPOST MP 0.000 - 9.528

PROJECT DESCRIPTION WIDENING SR 400 (I-4) FROM WEST OF CR 532 TO WEST OF SR 435 KIRKMAN ROAD AND FROM 1 MILE EAST OF SR 434 TO 1/2 MILE EAST OF SR 472.

PROPOSED ROADWAY TYPICAL SECTION

* VERTICAL CLEARANCE MEASURED FROM EXPRESS LANE INSIDE EDGE OF TRAVEL TO LOW MEMBER.

** 44' REQUIRED FOR FUTURE RAIL CORRIDOR. FUTURE RAIL CORRIDOR IS MEASURED FROM FACE OF FUTURE INSIDE BARRIER TO FACE OF FUTURE INSIDE BARRIER.

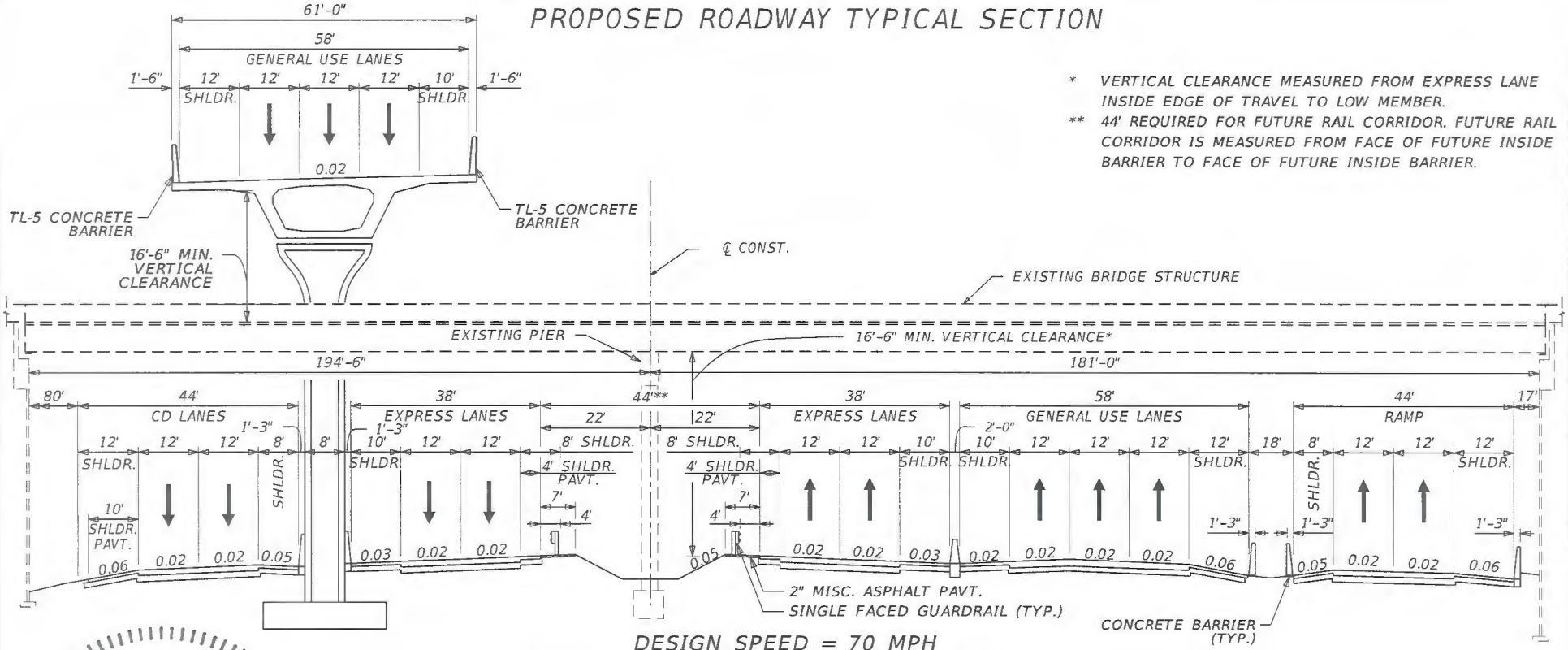

DESIGN SPEED = 70 MPH

SR 400 (I-4) UNDER DARYL CARTER PARKWAY

SHEET 1B-43

	FDOT CONCURRENCE	FHWA CONCURRENCE
ROBERT M. DENNEY, P.E. Date Engineer Of Record 58593	ANNETTE K. BRENNAN, P.E. FDOT District Design Engineer 3/17/17 Date	FHWA Transportation Engineer 4/12/18 Date

HNTB CORPORATION
610 CRESCENT EXEC. CT.
SUITE 400
LAKE MARY, FL 32746
(407) 805-0355
CERT OF AUTH NO 6500

ROBERT M. DENNEY LICENSE No. 58593 STATE OF FLORIDA PROFESSIONAL ENGINEER

mbacar 2/9/2017 2:39:09 PM \\LKMw00\pmwork3\Jobs\59219 - I4 SAMR\TECHPROD\Typical Section Package\TYPDRD01-SEG-1.DGN

PROJECT IDENTIFICATION

FINANCIAL PROJECT ID 432100-1-22-01 FEDERAL AID PROJECT NO. N/A COUNTY NAME ORANGE

SECTION NO. 75280 ROAD DESIGNATION SR 400 (I-4) LIMITS/MILEPOST MP 0.000 - 9.528

PROJECT DESCRIPTION WIDENING SR 400 (I-4) FROM WEST OF CR 532 TO WEST OF SR 435 KIRKMAN ROAD AND FROM 1 MILE EAST OF SR 434 TO 1/2 MILE EAST OF SR 472.

PROPOSED STRUCTURE TYPICAL SECTION

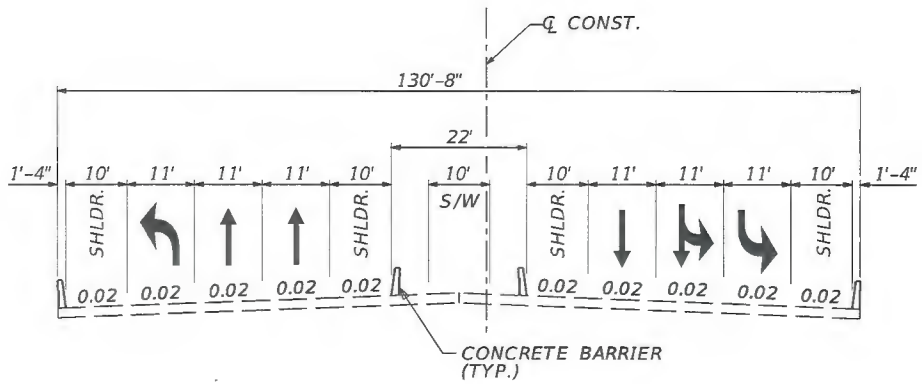

DARYL CARTER PARKWAY STRUCTURE SECTION
DIVERGING DIAMOND INTERCHANGE

SHEET 1B-44

APPROVED BY	FDOT CONCURRENCE	FHWA CONCURRENCE	COUNTY CONCURRENCE
ROBERT M. DENNEY, P.E. Engineer Of Record 58593 — Date 2/9/17	ANNETTE K. BRENNAN, P.E. FDOT District Design Engineer — Date 3/17/17	FHWA Transportation Engineer — Date	County Engineer — Date 8-14-7

HNTB CORPORATION
610 CRESCENT EXEC. CT.
SUITE 400
LAKE MARY, FL 32746
(407) 805-0355
CERT OF AUTH NO 6500

ROBERT M. DENNEY LICENSE No. 58593 STATE OF FLORIDA PROFESSIONAL ENGINEER

PROJECT IDENTIFICATION

FINANCIAL PROJECT ID: 432100-1-22-01 COUNTY (SECTION): ORANGE (75280)

PROJECT DESCRIPTION: WIDENING SR 400 (I-4) FROM WEST OF CR 532 TO WEST OF SR 435 (KIRKMAN RD.) AND FROM 1 MILE EAST OF SR 434 TO 1/2 MILE EAST OF SR 472.

PROJECT CONTROLS (CENTRAL FLORIDA PARKWAY)

FUNCTIONAL CLASSIFICATION

( ) RURAL
(X) URBAN

( ) FREEWAY/EXPWY. ( ) MAJOR COLL.
( ) PRINCIPAL ART. ( ) MINOR COLL.
(X) MINOR ART. ( ) LOCAL

HIGHWAY SYSTEM

Yes	No	
( )	(X)	NATIONAL HIGHWAY SYSTEM
( )	(X)	FLORIDA INTRASTATE HIGHWAY SYSTEM
( )	(X)	STRATEGIC INTERMODAL SYSTEM
( )	(X)	STATE HIGHWAY SYSTEM
(X)	( )	OFF STATE HIGHWAY SYSTEM

ACCESS CLASSIFICATION

( ) 1 - FREEWAY
( ) 2 - RESTRICTIVE w/Service Roads
( ) 3 - RESTRICTIVE w/660 ft. Connection Spacing
( ) 4 - NON-RESTRICTIVE w/2640 ft. Signal Spacing
(X) 5 - RESTRICTIVE w/440 ft. Connection Spacing
( ) 6 - NON-RESTRICTIVE w/1320 ft. Signal Spacing
( ) 7 - BOTH MEDIAN TYPES

TRAFFIC

	YEAR	AADT
OPENING	2020	44,000
INTERIM	2030	53,000
DESIGN	2040	60,000

DESIGN SPEED 45 MPH
POSTED SPEED 45 MPH

DISTRIBUTION

K	7.4
D	53.66
T_{24}	3.8%

CRITERIA

(X) NEW CONSTRUCTION / RECONSTRUCTION
( ) RRR INTERSTATE / FREEWAY
( ) RRR NON-INTERSTATE / FREEWAY
( ) TDLC / NEW CONSTRUCTION / RECONSTRUCTION
( ) TDLC / RRR
( ) MANUAL OF UNIFORM MINIMUM STANDARDS (FLORIDA GREENBOOK) (OFF-STATE HIGHWAY SYSTEM ONLY)

DESIGN SPEED APPROVALS

A K Brennan — 3/17/17
DISTRICT DESIGN ENGINEER — DATE

James D Stryk — 4/10/17
DISTRICT TRAFFIC OPERATIONS ENGINEER — DATE

LIST ANY POTENTIAL EXCEPTIONS AND VARIATIONS RELATED TO TYPICAL SECTION ELEMENTS:

N/A

LIST MAJOR STRUCTURES LOCATION/DESCRIPTION - REQUIRING INDEPENDENT STRUCTURE DESIGN:

CENTRAL FLORIDA PARKWAY (750142, 750200, 750402)

LIST MAJOR UTILITIES WITHIN PROJECT CORRIDOR:
GAS (CENTRAL FLORIDA GAS)
WATER (ORANGE COUNTY UTILITIES)
COMMUNICATIONS (BRIGHTHOUSE NETWORKS, COMCAST, LEVEL 3, VERIZON)
WASTEWATER (ORANGE COUNTY UTILITIES)
ELECTRIC (DUKE ENERGY DISTRIBUTION, DUKE ENERGY TRANSMISSION)

LIST OTHER INFORMATION PERTINENT TO DESIGN OF PROJECT:

N/A

PROJECT IDENTIFICATION

FINANCIAL PROJECT ID 432100-1-22-01 FEDERAL AID PROJECT NO. N/A COUNTY NAME ORANGE

SECTION NO. 75280 ROAD DESIGNATION SR 400 (I-4) LIMITS/MILEPOST MP 0.000 - 9.528

PROJECT DESCRIPTION WIDENING SR 400 (I-4) FROM WEST OF CR 532 TO WEST OF SR 435 KIRKMAN ROAD AND FROM 1 MILE EAST OF SR 434 TO 1/2 MILE EAST OF SR 472.

PROPOSED ROADWAY TYPICAL SECTION

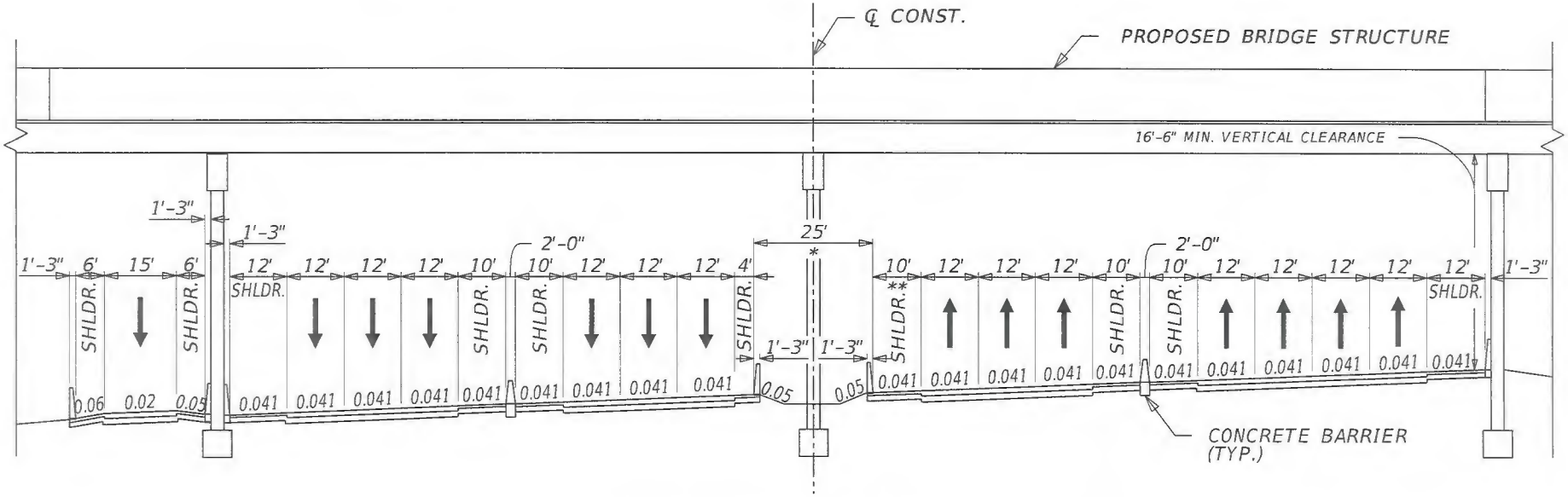

DESIGN SPEED = 70 MPH

SR 400 (I-4) UNDER WESTBOUND CENTRAL FLORIDA PARKWAY RAMP

* 25-FT REQUIRED FROM INSIDE FACE OF BARRIER TO INSIDE FACE OF BARRIER (HIGH SPEED RAIL ELEVATED IN THIS AREA).

** 10-FT WIDE SHOULDER USED IN LIEU OF 4-FT SHOULDER TO MEET STOPPING SIGHT DISTANCE.

SHEET 1B-46

APPROVED BY	FDOT CONCURRENCE	FHWA CONCURRENCE
ROBERT M. DENNEY, P.E. Date Engineer Of Record 58593	ANNETTE K. BRENNAN, P.E. FDOT District Design Engineer Date 3/17/17	FHWA Transportation Engineer Date 1/17/18

HNTB CORPORATION
610 CRESCENT EXEC. CT.
SUITE 400
LAKE MARY, FL 32746
(407) 805-0355
CERT OF AUTH NO 6500

ROBERT M. DENNEY LICENSE No 58593 STATE OF FLORIDA PROFESSIONAL ENGINEER

PROJECT IDENTIFICATION

FINANCIAL PROJECT ID 432100-1-22-01 FEDERAL AID PROJECT NO. N/A COUNTY NAME ORANGE

SECTION NO. 75280 ROAD DESIGNATION SR 400 (I-4) LIMITS/MILEPOST MP 0.000 - 9.528

PROJECT DESCRIPTION WIDENING SR 400 (I-4) FROM WEST OF CR 532 TO WEST OF SR 435 KIRKMAN ROAD AND FROM 1 MILE EAST OF SR 434 TO 1/2 MILE EAST OF SR 472.

PROPOSED ROADWAY TYPICAL SECTION

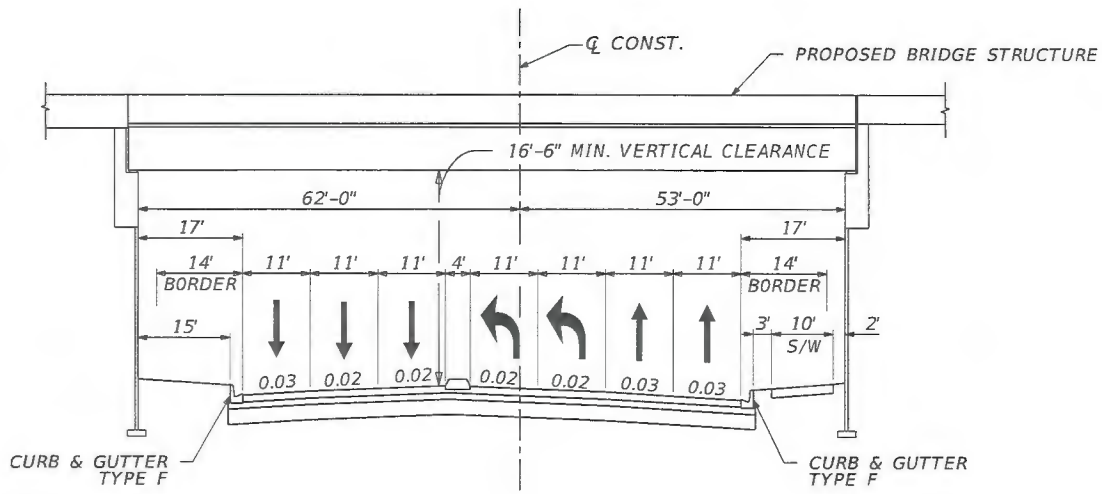

DESIGN SPEED = 45 MPH

CENTRAL FLORIDA PARKWAY UNDER SR 400 (I-4)

SHEET 1B-47

APPROVED BY	FDOT CONCURRENCE	FHWA CONCURRENCE	COUNTY CONCURRENCE
ROBERT M. DENNEY, P.E. Engineer Of Record 58593 — Date 2/9/17	ANNETTE K. BRENNAN, P.E. FDOT District Design Engineer — Date 3/17/17	FHWA Transportation Engineer — Date 1/17/18	County Engineer — Date 8-14-17

HNTB CORPORATION
610 CRESCENT EXEC. CT.
SUITE 400
LAKE MARY, FL 32746
(407) 805-0355
CERT OF AUTH NO 6500

ROBERT M. DENNEY LICENSE No. 58593 STATE OF FLORIDA PROFESSIONAL ENGINEER

mbatal 2/9/2017 2:39:12 PM \\LKMw00\pmwork3\Jobs\59219 - I4 SAMR\TECHPROD\Typical Section Package\TYPDRD01-SEG-1.DGN

I-4 Beyond the Ultimate

Osceola County Typical Section Package Index

PD&E FPID: 432100-1 (Segment 1A)
Design FPID: 431456-1

I-4 Mainline

1A-1 Key Sheet
1A-2 I-4 Project Controls
1A-3 I-4 Typical Section with Rail Corridor (Osceola County)
1A-4 I-4 Typical Section Bridge Viaduct Between SR 429 and World Drive (Orange County)
1A-5 I-4 Bridge Over CR 532 (Replace)
1A-6 I-4 Bridge Over Reedy Creek (Replace)
1A-7 I-4 Bridge Over Bonnet Creek (Replace)

Ramps

1A-8 One Lane Ramp
1A-9 Two Lane Ramp
1A-10 Three Lane Ramp
1A-11 One Lane Bridge Ramp

CR 532

1A-12 CR 532 Project Controls
1A-13 CR 532 Roadway Section Under I-4
1A-14 CR 532 Roadway Section

Tradition Boulevard

1A-15 I-4 Under Tradition Blvd

SR 429

1A-16 I-4 Under SR 429 Northbound Ramp
1A-17 I-4 Under SR 429 Southbound to Eastbound I-4

Old Lake Wilson Road

1A-18 Old Lake Wilson Project Controls
1A-19 I-4 Under Old Lake Wilson Road
1A-20 Old Lake Wilson Road Bridge Section (Replace)
1A-21 Old Lake Wilson Road Section

I-4 Beyond the Ultimate

Osceola County Typical Section Package Index

PD&E FPID: 432100-1 (Segment 1A)
Design FPID: 431456-1

World Drive

1A-22 World Drive Project Controls
1A-23 World Drive Bridge Section (Replace)
1A-24 I-4 Under Eastbound and Westbound World Drive
1A-25 World Drive Roadway Section

SR 417

1A-26 SR 417 Project Controls
1A-27 SR 417 Bridge Section (Southbound) (Replace)
1A-28 I-4 Under SR 417 (Southbound)
1A-29 SR 417 Bridge Section (Northbound)

US 192 / SR 530

1A-30 US 192 Project Controls
1A-31 US 192 Bridge Section (Replace)
1A-32 I-4 Under US 192 Eastbound Ramp
1A-33 US 192 Bridge Section (Replace)
1A-34 I-4 Under US 192
1A-35 I-4 Under Westbound Ramp to Westbound I-4
1A-36 US 192 Bridge Section (Eastbound I-4 to Westbound US 192)
1A-37 I-4 Under Westbound Ramp

Osceola Parkway

1A-38 Osceola Parkway Project Controls
1A-39 Osceola Parkway Bridge Section (Replace)
1A-40 Osceola Parkway Roadway Section (West of SR 400)
1A-41 Osceola Parkway Roadway Section (East of SR 400)
1A-42 I-4 Under Osceola Parkway

STATE OF FLORIDA

DEPARTMENT OF TRANSPORTATION

FINANCIAL PROJECT ID 432100-1-22-01
(FEDERAL FUNDS)

N

0 3 6

Miles

OSCEOLA COUNTY (92130)

STATE ROAD NO. 400 (I-4)
I-4 BEYOND THE ULTIMATE
TYPICAL SECTION PACKAGE

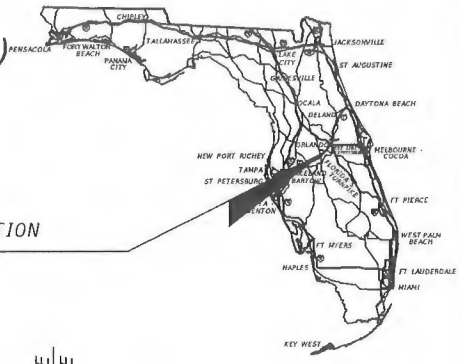

PROJECT LOCATION

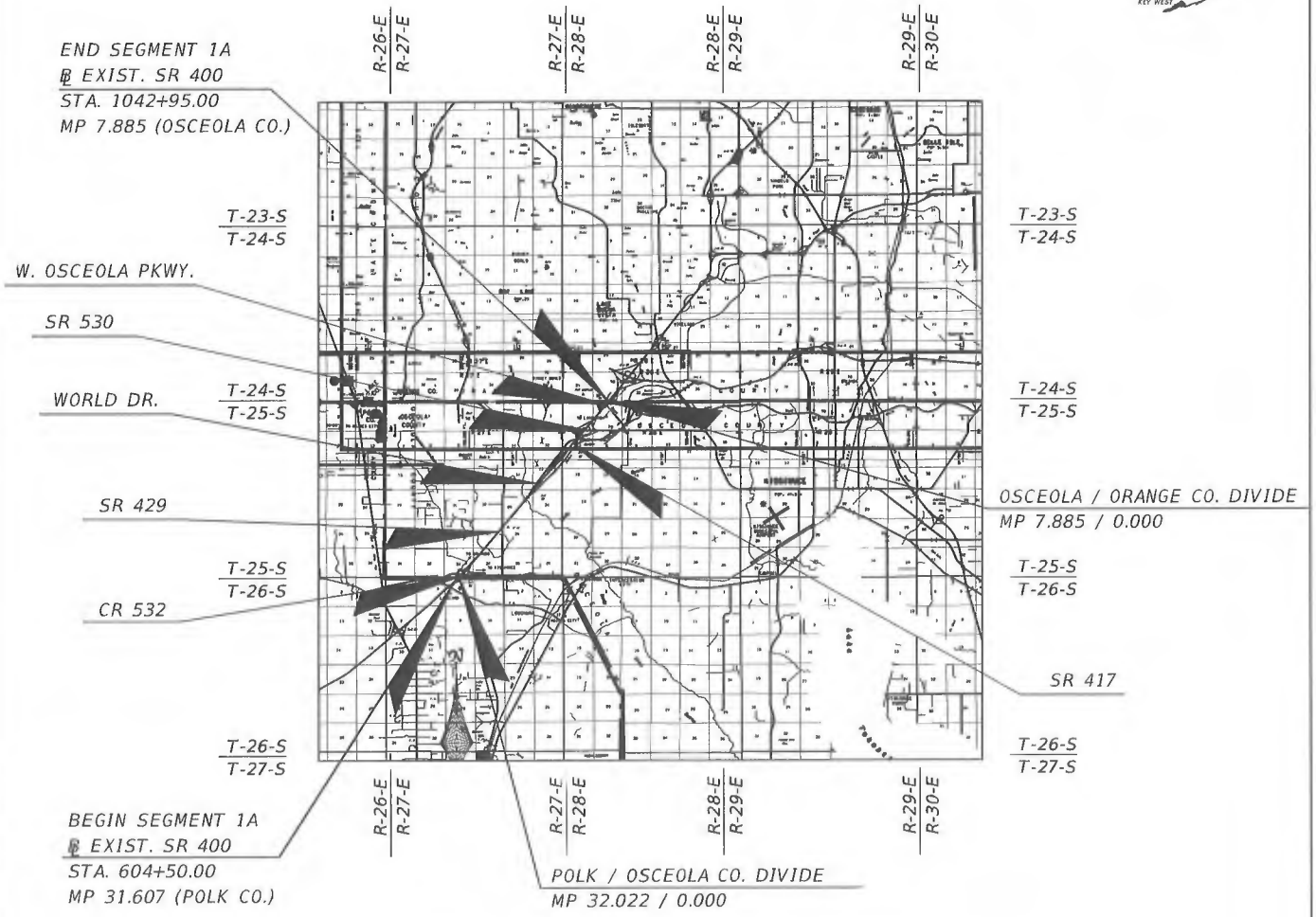

PROJECT LENGTH IS BASED ON ℄ OF CONSTRUCTION

LENGTH OF PROJECT		
	LINEAR FEET	MILES
ROADWAY	43345.74	8.209
BRIDGES	478.26	0.091
NET LENGTH OF PROJECT	43824.00	8.300
EXCEPTIONS	--	--
GROSS LENGTH OF PROJECT	43824.00	8.300

FDOT PROJECT MANAGER: BEATA STYŚ-PALASZ, PE

SHEET 1A-1

PROJECT IDENTIFICATION

FINANCIAL PROJECT ID: 432100-1-22-01 COUNTY (SECTION): OSCEOLA (92130)

PROJECT DESCRIPTION: WIDENING SR 400 (I-4) FROM WEST OF CR 532 TO WEST OF SR 435 (KIRKMAN RD.) AND FROM 1 MILE EAST OF SR 434 TO 1/2 MILE EAST OF SR 472.

PROJECT CONTROLS (SR 400/I-4)

FUNCTIONAL CLASSIFICATION

( ) RURAL
(X) URBAN

(X) FREEWAY/EXPWY. ( ) MAJOR COLL.
( ) PRINCIPAL ART. ( ) MINOR COLL.
( ) MINOR ART. ( ) LOCAL

HIGHWAY SYSTEM

Yes	No	
(X)	( )	NATIONAL HIGHWAY SYSTEM
(X)	( )	FLORIDA INTRASTATE HIGHWAY SYSTEM
(X)	( )	STRATEGIC INTERMODAL SYSTEM
(X)	( )	STATE HIGHWAY SYSTEM
( )	(X)	OFF STATE HIGHWAY SYSTEM

ACCESS CLASSIFICATION

(X) 1 - FREEWAY
( ) 2 - RESTRICTIVE w/Service Roads
( ) 3 - RESTRICTIVE w/660 ft. Connection Spacing
( ) 4 - NON-RESTRICTIVE w/2640 ft. Signal Spacing
( ) 5 - RESTRICTIVE w/440 ft. Connection Spacing
( ) 6 - NON-RESTRICTIVE w/1320 ft. Signal Spacing
( ) 7 - BOTH MEDIAN TYPES

TRAFFIC

	YEAR	AADT
OPENING	2020	202,000
INTERIM	2030	237,000
DESIGN	2040	269,000

DESIGN SPEED 70 MPH
POSTED SPEED 70 MPH

DISTRIBUTION

K	7.4
D	52.92
T_{24}	10.2%

CRITERIA

(X) NEW CONSTRUCTION / RECONSTRUCTION
( ) RRR INTERSTATE / FREEWAY
( ) RRR NON-INTERSTATE / FREEWAY
( ) TDLC / NEW CONSTRUCTION / RECONSTRUCTION
( ) TDLC / RRR
( ) MANUAL OF UNIFORM MINIMUM STANDARDS (FLORIDA GREENBOOK) (OFF-STATE HIGHWAY SYSTEM ONLY)

DESIGN SPEED APPROVALS

A K Brennan — 3/17/17
DISTRICT DESIGN ENGINEER — DATE

4/10/17
DISTRICT TRAFFIC OPERATIONS ENGINEER — DATE

LIST ANY POTENTIAL EXCEPTIONS AND VARIATIONS RELATED TO TYPICAL SECTION ELEMENTS:

BORDER WIDTH (VARIATION) - FOR THE BORDER WIDTHS LESS THAN 94-FT (94-FT REQUIRED)
SHOULDER WIDTH (VARIATION) - FOR THE 10-FT MEDIAN GUL SHOULDER (12-FT REQUIRED)
SHOULDER WIDTH (VARIATION) - FOR THE 4-FT MEDIAN EXPRESS LANE SHOULDER (6-FT REQUIRED)

LIST MAJOR STRUCTURES LOCATION/DESCRIPTION - REQUIRING INDEPENDENT STRUCTURE DESIGN:

CR 532	(920094, 920095)
DAVENPORT CREEK	(920097)
REUNION ACCESS RD	(925500)
DITCH CULVERT	(920203)
SR 429	(920601, 920602)
CR 545	(924179)
REEDY CREEK	(920098, 920099)
WORLD DRIVE	(920176, 920170)
SR 417	(920169)
US 192	(920083, 920193, 920192, 920195, 920194)
BONNET CREEK	(920100, 920101)
OSCEOLA PARKWAY	(920180)

LIST MAJOR UTILITIES WITHIN PROJECT CORRIDOR:
GAS (CENTRAL FLORIDA GAS)
WATER (OSCEOLA COUNTY UTILITIES)
COMMUNICATIONS (BRIGHTHOUSE NETWORKS, COMCAST, LEVEL 3, VERIZON)
WASTEWATER (OSCEOLA COUNTY UTILITIES)
ELECTRIC (DUKE ENERGY DISTRIBUTION, DUKE ENERGY TRANSMISSION)

LIST OTHER INFORMATION PERTINENT TO DESIGN OF PROJECT:

N/A

SHEET 1A-2

PROJECT IDENTIFICATION

FINANCIAL PROJECT ID 432100-1-22-01 FEDERAL AID PROJECT NO. N/A COUNTY NAME OSCEOLA

SECTION NO. 92130 ROAD DESIGNATION SR 400 (I-4) LIMITS/MILEPOST MP 0.000 - 7.885

PROJECT DESCRIPTION WIDENING SR 400 (I-4) FROM WEST OF CR 532 TO WEST OF SR 435 KIRKMAN ROAD AND FROM 1 MILE EAST OF SR 434 TO 1/2 MILE EAST OF SR 472.

PROPOSED ROADWAY TYPICAL SECTION

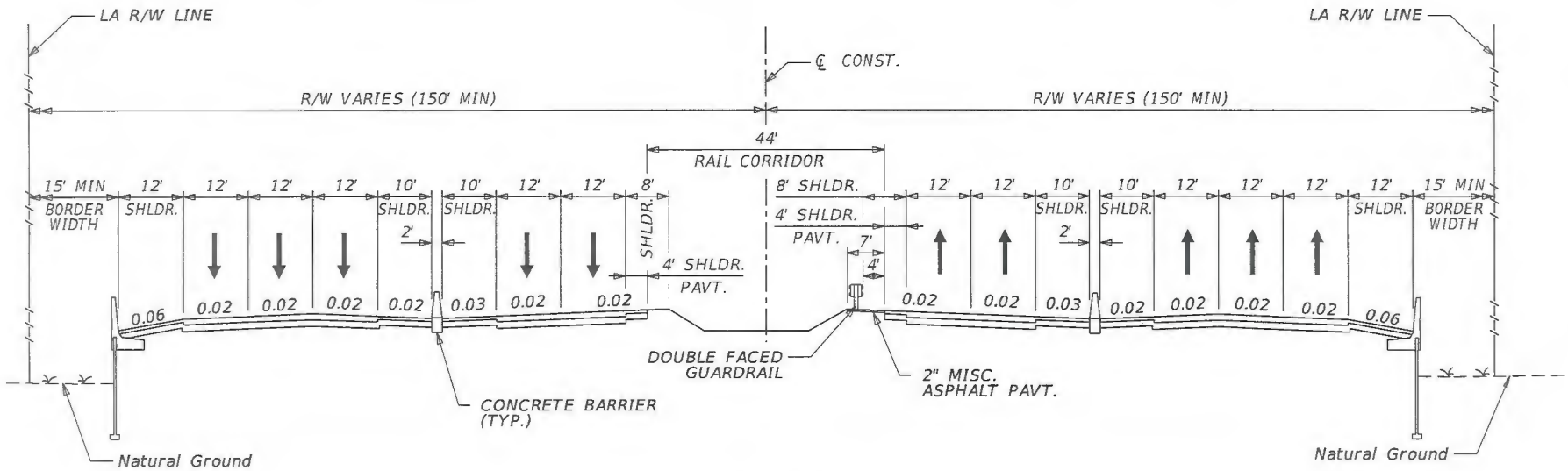

DESIGN SPEED = 70 MPH
SR 400 (I-4) WITH RAIL CORRIDOR
STA 627+20.00 TO STA 759+00.00
STA 828+00.00 TO STA 1042+95.00

SHEET 1A-3

APPROVED BY	FDOT CONCURRENCE	FHWA CONCURRENCE
ROBERT M. DENNEY, P.E. Engineer of Record 58593 — Date 2/9/2017	ANNETTE K. BRENNAN, P.E. FDOT District Design Engineer — Date 3/17/17	FHWA Transportation Engineer — Date 7/25/17

HNTB CORPORATION
610 CRESCENT EXEC. CT.
SUITE 400
LAKE MARY, FL 32746
(407) 805-0355
CERT OF AUTH NO 6500

ROBERT M. DENNEY LICENSE No 58593 STATE OF FLORIDA PROFESSIONAL ENGINEER

mbacal 2/9/2017 2:38:14 PM \\LKMw00\pmwork3\Jobs\59219 - 14 SAMR\TECHPROD\Typical Section Package\TYPDRD01-I-4 TYPICALS.DGN

PROJECT IDENTIFICATION

FINANCIAL PROJECT ID 432100-1-22-01 FEDERAL AID PROJECT NO. N/A COUNTY NAME OSCEOLA

SECTION NO. 92130 ROAD DESIGNATION SR 400 (I-4) LIMITS/MILEPOST MP 0.000 - 7.885

PROJECT DESCRIPTION WIDENING SR 400 (I-4) FROM WEST OF CR 532 TO WEST OF SR 435 KIRKMAN ROAD AND FROM 1 MILE EAST OF SR 434 TO 1/2 MILE EAST OF SR 472.

PROPOSED ROADWAY TYPICAL SECTION

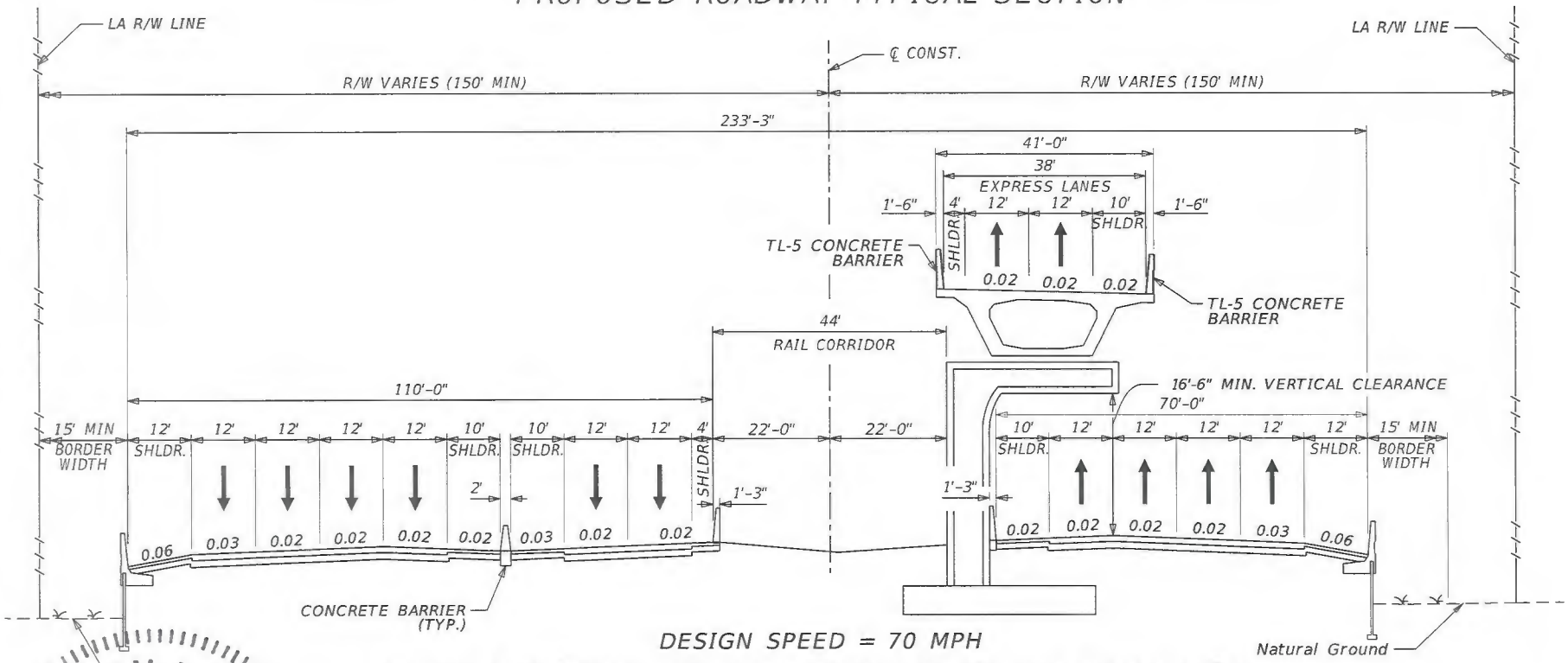

DESIGN SPEED = 70 MPH

SR 400 (I-4) BRIDGE VIADUCT BETWEEN SR 429 AND WORLD DRIVE

STA 759+00 TO STA 828+00

SHEET 1A-4

APPROVED BY	FDOT CONCURRENCE	FHWA CONCURRENCE
STATE OF FLORIDA ROBERT M. DENNEY LICENSE No. 58593 PROFESSIONAL ENGINEER 2/9/17 ROBERT M. DENNEY, P.E. Date Engineer Of Record 58593 HNTB CORPORATION 610 CRESCENT EXEC. CT. SUITE 400 LAKE MARY, FL 32746 (407) 805-0355 CERT OF AUTH NO 6500	AK Brennan 3/17/17 ANNETTE K. BRENNAN, P.E. Date FDOT District Design Engineer	7/25/17 FHWA Transportation Engineer Date

mbacal 2/9/2017 2:38:14 PM \\LKMw00\pmwork3\Jobs\59219 - I4 SAMR\TECHPROD\Typical Section Package\TYPDRD01-I-4 TYPICALS.DGN

PROJECT IDENTIFICATION

FINANCIAL PROJECT ID 432100-1-22-01 FEDERAL AID PROJECT NO. N/A COUNTY NAME OSCEOLA

SECTION NO. 92130 ROAD DESIGNATION SR 400 (I-4) LIMITS/MILEPOST MP 0.000 - 7.885

PROJECT DESCRIPTION WIDENING SR 400 (I-4) FROM WEST OF CR 532 TO WEST OF SR 435 KIRKMAN ROAD AND FROM 1 MILE EAST OF SR 434 TO 1/2 MILE EAST OF SR 472.

PROPOSED STRUCTURE TYPICAL SECTION

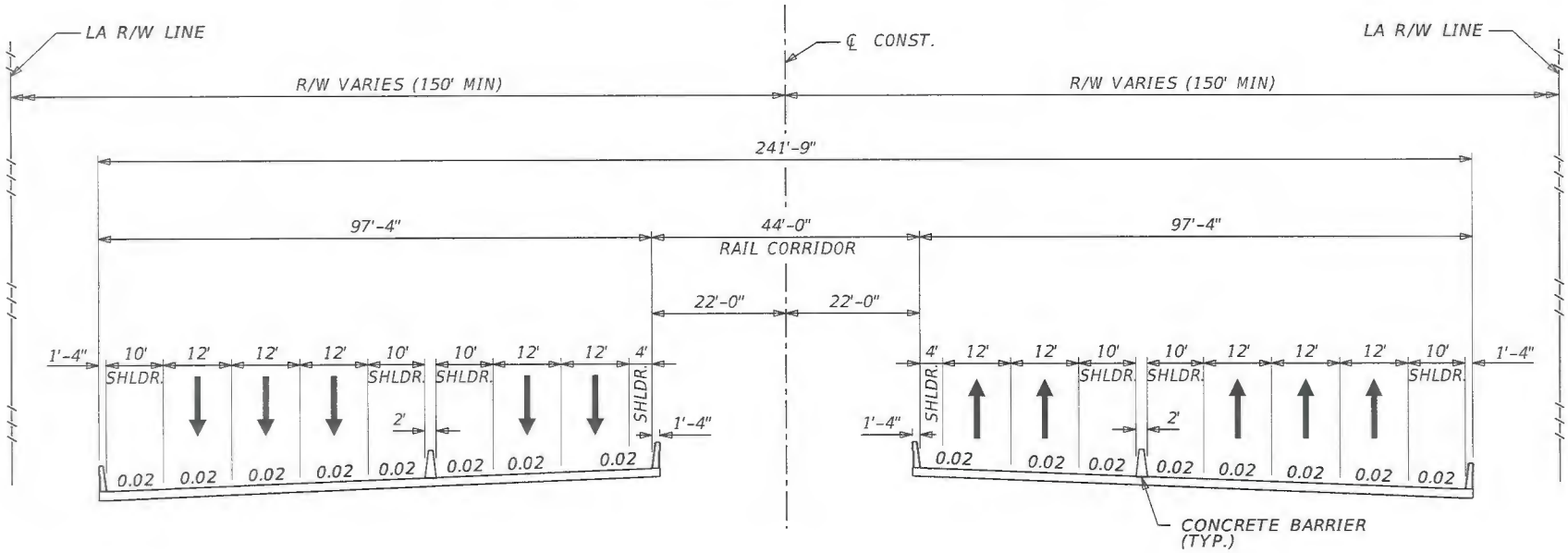

DESIGN SPEED = 70 MPH

SR 400 (I-4) BRIDGE OVER CR 532

SHEET 1A-5

APPROVED BY	FDOT CONCURRENCE	FHWA CONCURRENCE
STATE OF FLORIDA ROBERT M. DENNEY, P.E. Date 3/9/17 Engineer of Record 58593	ANNETTE K. BRENNAN, P.E. FDOT District Design Engineer Date 3/17/17	FHWA Transportation Engineer Date 7/25/17

HNTB CORPORATION
610 CRESCENT EXEC. CT.
SUITE 400
LAKE MARY, FL 32746
(407) 805-0355
CERT OF AUTH NO 6500

ROBERT M. DENNEY LICENSE No 58593 STATE OF FLORIDA PROFESSIONAL ENGINEER

PROJECT IDENTIFICATION

FINANCIAL PROJECT ID 432100-1-22-01 FEDERAL AID PROJECT NO. N/A COUNTY NAME OSCEOLA

SECTION NO. 92130 ROAD DESIGNATION SR 400 (I-4) LIMITS/MILEPOST MP 0.000 - 7.885

PROJECT DESCRIPTION WIDENING SR 400 (I-4) FROM WEST OF CR 532 TO WEST OF SR 435 KIRKMAN ROAD AND FROM 1 MILE EAST OF SR 434 TO 1/2 MILE EAST OF SR 472.

PROPOSED STRUCTURE TYPICAL SECTION

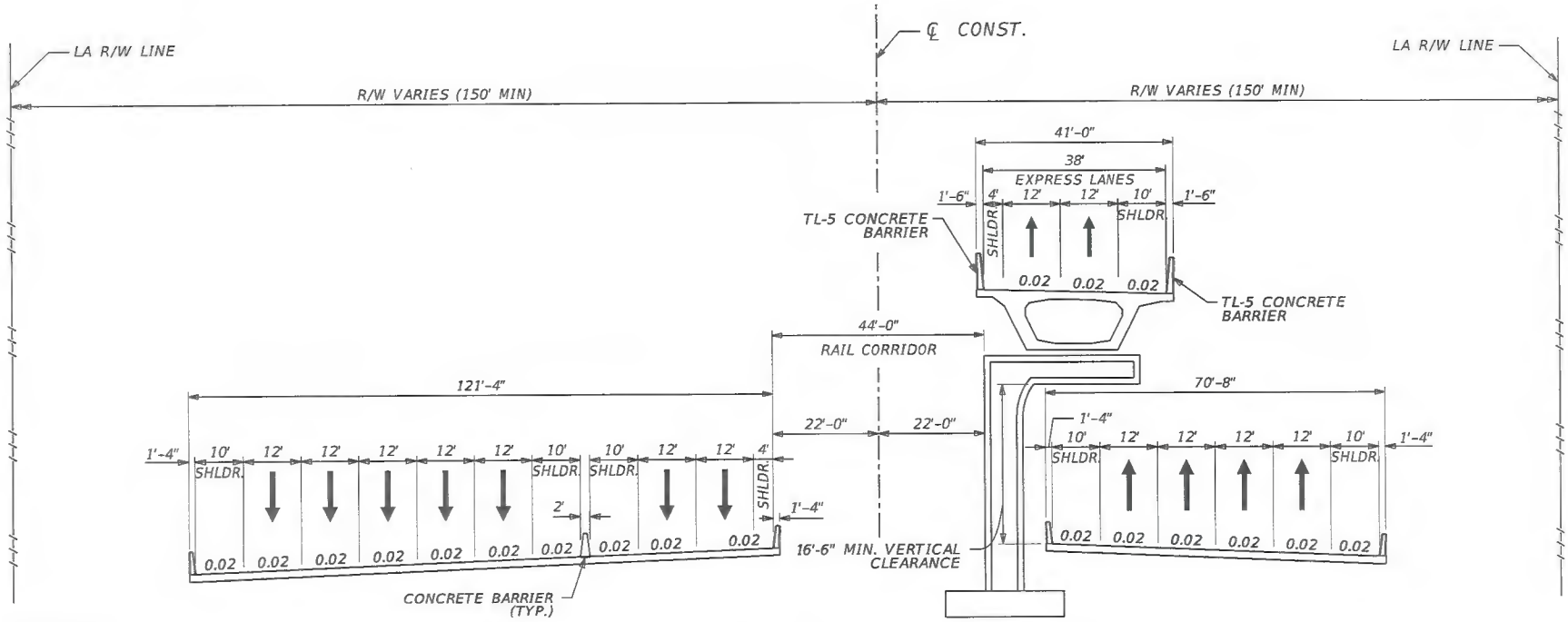

DESIGN SPEED = 70 MPH
SR 400 (I-4) BRIDGE OVER REEDY CREEK

SHEET 1A-6

APPROVED BY	FDOT CONCURRENCE	FHWA CONCURRENCE
ROBERT M. DENNEY, P.E. Date Engineer of Record 58593 HNTB CORPORATION 610 CRESCENT EXEC. CT. SUITE 400 LAKE MARY, FL 32746 (407) 805-0355 CERT OF AUTH NO 6500	ANNETTE K. BRENNAN, P.E. FDOT District Design Engineer Date 3/17/17	FHWA Transportation Engineer Date 7/25/17

ROBERT M. DENNEY LICENSE No. 58593 STATE OF FLORIDA PROFESSIONAL ENGINEER

PROJECT IDENTIFICATION

FINANCIAL PROJECT ID 432100-1-22-01 FEDERAL AID PROJECT NO. N/A COUNTY NAME OSCEOLA

SECTION NO. 92130 ROAD DESIGNATION SR 400 (I-4) LIMITS/MILEPOST MP 0.000 - 7.885

PROJECT DESCRIPTION WIDENING SR 400 (I-4) FROM WEST OF CR 532 TO WEST OF SR 435 KIRKMAN ROAD AND FROM 1 MILE EAST OF SR 434 TO 1/2 MILE EAST OF SR 472.

PROPOSED STRUCTURE TYPICAL SECTION

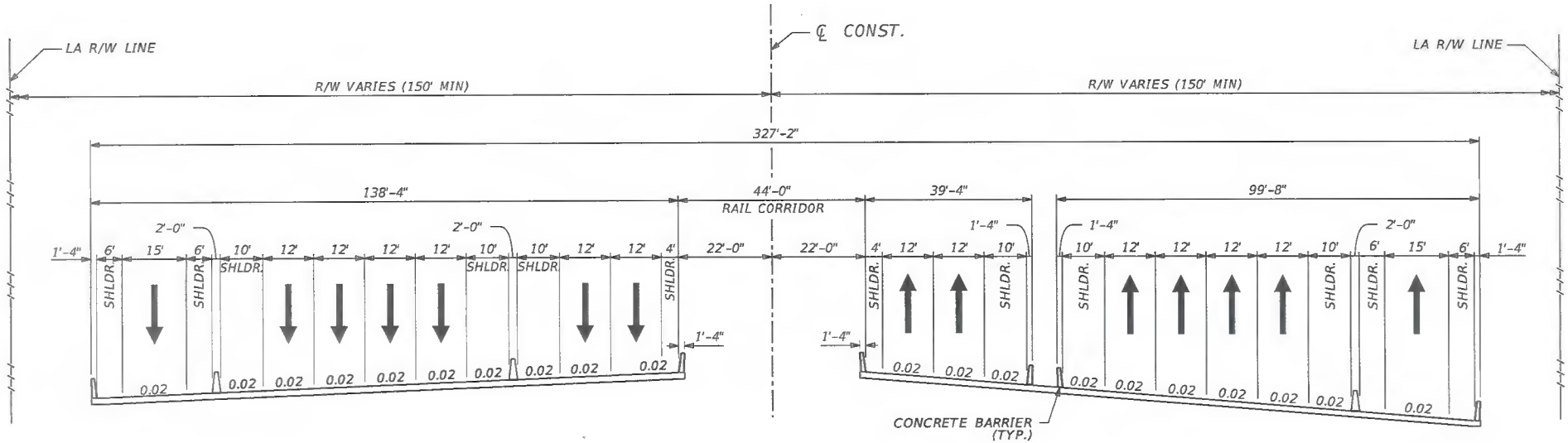

DESIGN SPEED = 70 MPH

SR 400 (I-4) BRIDGE OVER BONNET CREEK

SHEET 1A-7

APPROVED BY	FDOT CONCURRENCE	FHWA CONCURRENCE
ROBERT M. DENNEY, P.E. Date Engineer of Record 58593	ANNETTE K. BRENNAN, P.E. FDOT District Design Engineer Date 3/17/17	FHWA Transportation Engineer Date 7/25/17

HNTB CORPORATION
610 CRESCENT EXEC. CT.
SUITE 400
LAKE MARY, FL 32746
(407) 805-0355
CERT OF AUTH NO 6500

ROBERT M. DENNEY LICENSE No. 58593 STATE OF FLORIDA PROFESSIONAL ENGINEER

PROJECT IDENTIFICATION

FINANCIAL PROJECT ID 432100-1-22-01 FEDERAL AID PROJECT NO. N/A COUNTY NAME OSCEOLA

SECTION NO. 92130 ROAD DESIGNATION SR 400 (I-4) LIMITS/MILEPOST MP 0.000 - 7.885

PROJECT DESCRIPTION WIDENING SR 400 (I-4) FROM WEST OF CR 532 TO WEST OF SR 435 KIRKMAN ROAD AND FROM 1 MILE EAST OF SR 434 TO 1/2 MILE EAST OF SR 472.

Ramp	Design Speed
SEGMENT 1A	
I-4 EB GUL TO CR 532	50
CR 532 TO I-4 WB GUL	50
CR 532 TO I-4 EB GUL	50
I-4 EB GUL TO SR 429	50
I-4 EB EXPRESS LANE TO SR 429	50
SR 429 TO I-4 WB EXPRESS LANE	50
I-4 WB EXPRESS LANE TO SR 429	50
I-4 WB GUL TO SR 429	50
I-4 EB RAMP TO OSCEOLA PKWY	50
OSCEOLA PKWY TO I-4 WB GUL	50
I-4 EB GUL TO OSCEOLA PKWY WB	50
I-4 EB GUL TO OSCEOLA PKWY WB	30
I-4 WB GUL TO OSCEOLA PKWY WB	30
I-4 WB GUL TO OSCEOLA PKWY WB	50
I-4 EB EXPRESS LANE TO OSCEOLA PKWY EB	50
I-4 EB RAMP TO WB OSCEOLA PKWY	30

PROPOSED ROADWAY TYPICAL SECTION

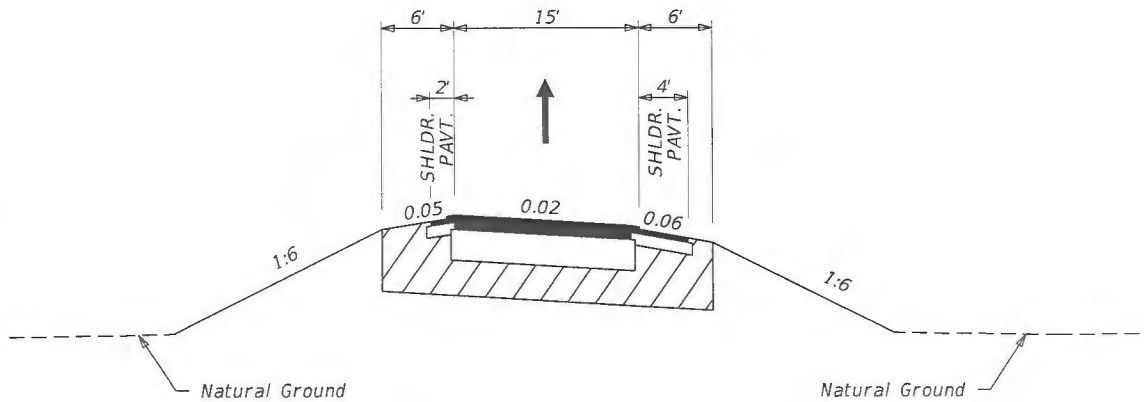

SR 400 (I-4)
ONE LANE RAMP

SHEET 1A-8

APPROVED BY	FDOT CONCURRENCE	FHWA CONCURRENCE
ROBERT M. DENNEY, P.E. Date Engineer Of Record 58593 HNTB CORPORATION 610 CRESCENT EXEC. CT. SUITE 400 LAKE MARY, FL 32746 (407) 805-0355 CERT OF AUTH NO 6500	ANNETTE K. BRENNAN, P.E. FDOT District Design Engineer Date 3/17/17	FHWA Transportation Engineer Date 7/25/17

ROBERT M. DENNEY LICENSE No 58593 STATE OF FLORIDA PROFESSIONAL ENGINEER 2/9/17

mbacal 2/9/2017 2:38:16 PM \\LKMw00\pmwork3\Jobs\59219 - I4 SAMR\TECHPROD\Typical Section Package\TYPDRD01-RAMPS.DGN

PROJECT IDENTIFICATION

FINANCIAL PROJECT ID 432100-1-22-01 FEDERAL AID PROJECT NO. N/A COUNTY NAME OSCEOLA

SECTION NO. 92130 ROAD DESIGNATION SR 400 (I-4) LIMITS/MILEPOST MP 0.000 - 7.885

PROJECT DESCRIPTION WIDENING SR 400 (I-4) FROM WEST OF CR 532 TO WEST OF SR 435 KIRKMAN ROAD AND FROM 1 MILE EAST OF SR 434 TO 1/2 MILE EAST OF SR 472.

Ramp	Design Speed
SEGMENT 1A	
I-4 WB GUL TO CR 532	50
I-4 EB RAMP TO SR 429 WB	50
SR 429 TO I-4 WB GUL	50
SR 429 TO I-4 EB GUL	50
I-4 WB RAMP TO OSCEOLA PKWY WB	50
OSCEOLA PKWY TO I-4 EB GUL	50

PROPOSED ROADWAY TYPICAL SECTION

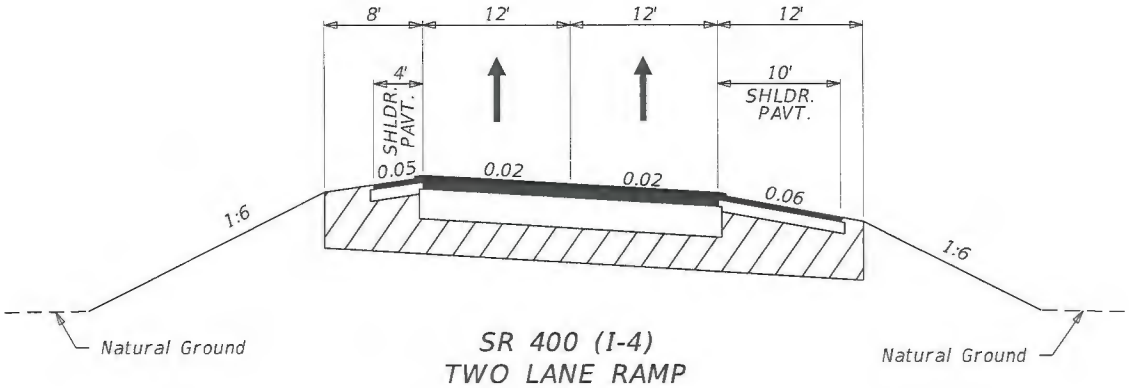

SR 400 (I-4)
TWO LANE RAMP

SHEET 1A-9

APPROVED BY	FDOT CONCURRENCE	FHWA CONCURRENCE
ROBERT M. DENNEY, P.E. Date Engineer Of Record 58593 HNTB CORPORATION 610 CRESCENT EXEC. CT. SUITE 400 LAKE MARY, FL 32746 (407) 805-0355 CERT OF AUTH NO 6500	ANNETTE K. BRENNAN, P.E. FDOT District Design Engineer Date 3/17/17	FHWA Transportation Engineer Date 7/25/17

ROBERT M. DENNEY LICENSE No. 58593 STATE OF FLORIDA PROFESSIONAL ENGINEER

mbatal 2/9/2017 2:38:16 PM \\LKMw00\pmwork3\Jobs\59219 - I4 SAMR\TECHPROD\Typical Section Package\TYPDRD01-RAMPS.DGN

PROJECT IDENTIFICATION

FINANCIAL PROJECT ID 432100-1-22-01 FEDERAL AID PROJECT NO. N/A COUNTY NAME OSCEOLA

SECTION NO. 92130 ROAD DESIGNATION SR 400 (I-4) LIMITS/MILEPOST MP 0.000 - 7.885

PROJECT DESCRIPTION WIDENING SR 400 (I-4) FROM WEST OF CR 532 TO WEST OF SR 435 KIRKMAN ROAD AND FROM 1 MILE EAST OF SR 434 TO 1/2 MILE EAST OF SR 472.

Ramp	Design Speed
SEGMENT 1A	
I-4 TO SR 429	50

PROPOSED ROADWAY TYPICAL SECTION

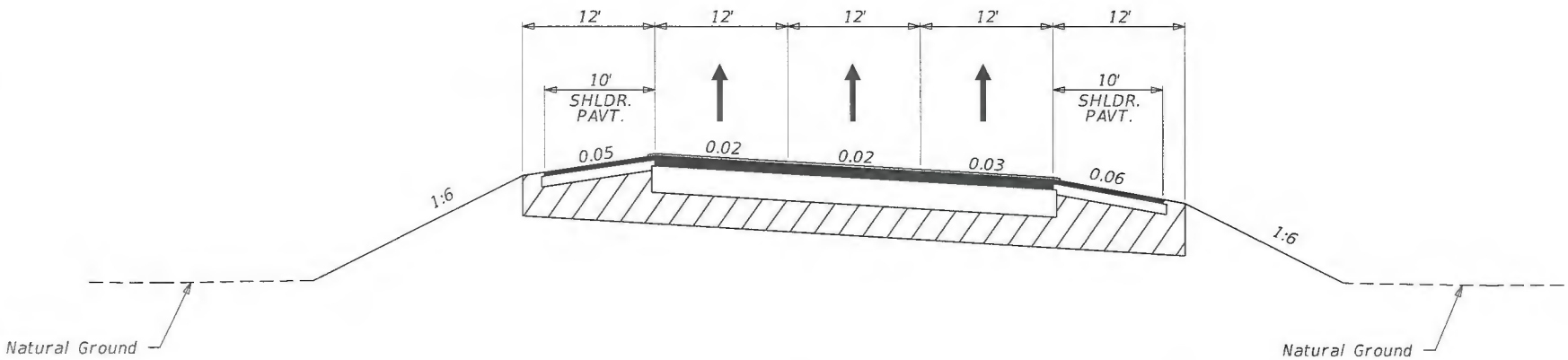

SR 400 (I-4)
THREE LANE RAMP

SHEET 1A-10

APPROVED BY	FDOT CONCURRENCE	FHWA CONCURRENCE
ROBERT M. DENNEY, P.E. Date Engineer Of Record 58593 HNTB CORPORATION 610 CRESCENT EXEC. CT. SUITE 400 LAKE MARY, FL 32746 (407) 805-0355 CERT OF AUTH NO 6500	ANNETTE K. BRENNAN, P.E. 3/17/17 Date FDOT District Design Engineer	FHWA Transportation Engineer 7/25/17 Date

ROBERT M. DENNEY LICENSE No. 58593 STATE OF FLORIDA PROFESSIONAL ENGINEER

mbacal 2/9/2017 2:38:16 PM \\LKMw00\pmwork3\Jobs\59219 - I4 SAMR\TECHPROD\Typical Section Package\TYPDRD01-RAMPS.DGN

PROJECT IDENTIFICATION

FINANCIAL PROJECT ID 432100-1-22-01 FEDERAL AID PROJECT NO. N/A COUNTY NAME OSCEOLA

SECTION NO. 92130 ROAD DESIGNATION SR 400 (I-4) LIMITS/MILEPOST MP 0.000 - 7.885

PROJECT DESCRIPTION WIDENING SR 400 (I-4) FROM WEST OF CR 532 TO WEST OF SR 435 KIRKMAN ROAD AND FROM 1 MILE EAST OF SR 434 TO 1/2 MILE EAST OF SR 472.

Ramp	Design Speed
SEGMENT 1A	
I-4 EB EXPRESS LANE TO SR 429	50
SR 429 TO I-4 WB EXPRESS LANE	50
I-4 WB EXPRESS LANE TO SR 429	50
I-4 EB EXPRESS LANE TO OSCEOLA PKWY EB	50
OSCEOLA PKWY EB RAMP TO I-4 EXPRESS LANES EB	50
I-4 EB RAMP TO WB OSCEOLA PKWY	30

PROPOSED STRUCTURE TYPICAL SECTION

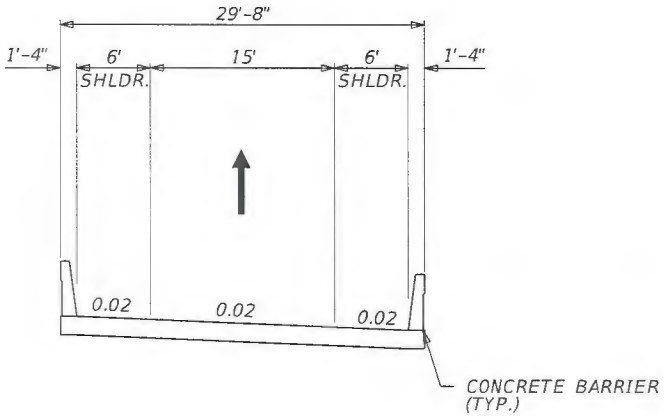

SR 400 (I-4)
ONE LANE BRIDGE RAMP

SHEET 1A-11

APPROVED BY	FDOT CONCURRENCE	FHWA CONCURRENCE
ROBERT M. DENNEY, P.E. Date Engineer Of Record 58593 HNTB CORPORATION 610 CRESCENT EXEC. CT. SUITE 400 LAKE MARY, FL 32746 (407) 805-0355 CERT OF AUTH NO 6500	ANNETTE K. BRENNAN, P.E. FDOT District Design Engineer Date 3/17/17	FHWA Transportation Engineer Date 7/25/17

ROBERT M. DENNEY LICENSE No. 58593 STATE OF FLORIDA PROFESSIONAL ENGINEER

mbaca 7/6/2017 2:38:16 PM \\LKMw00\pmwork3\Jobs\59219 - I4 SAMR\TECHPROD\Typical Section Package\TYPDRD01-RAMPS.DGN

PROJECT IDENTIFICATION

FINANCIAL PROJECT ID: 432100-1-22-01 COUNTY (SECTION): OSCEOLA (92130)

PROJECT DESCRIPTION: WIDENING SR 400 (I-4) FROM WEST OF CR 532 TO WEST OF SR 435 (KIRKMAN RD.) AND FROM 1 MILE EAST OF SR 434 TO 1/2 MILE EAST OF SR 472.

PROJECT CONTROLS (CR 532)

FUNCTIONAL CLASSIFICATION

( ) RURAL
(X) URBAN

( ) FREEWAY/EXPWY. ( ) MAJOR COLL.
( ) PRINCIPAL ART. ( ) MINOR COLL.
(X) MINOR ART. ( ) LOCAL

HIGHWAY SYSTEM

Yes	No	
( )	(X)	NATIONAL HIGHWAY SYSTEM
( )	(X)	FLORIDA INTRASTATE HIGHWAY SYSTEM
( )	(X)	STRATEGIC INTERMODAL SYSTEM
( )	(X)	STATE HIGHWAY SYSTEM
(X)	( )	OFF STATE HIGHWAY SYSTEM

ACCESS CLASSIFICATION

( ) 1 - FREEWAY
( ) 2 - RESTRICTIVE w/Service Roads
(X) 3 - RESTRICTIVE w/660 ft. Connection Spacing
( ) 4 - NON-RESTRICTIVE w/2640 ft. Signal Spacing
( ) 5 - RESTRICTIVE w/440 ft. Connection Spacing
( ) 6 - NON-RESTRICTIVE w/1320 ft. Signal Spacing
( ) 7 - BOTH MEDIAN TYPES

TRAFFIC

	YEAR	AADT
OPENING	2020	29,000
INTERIM	2030	39,000
DESIGN	2040	48,000

DESIGN SPEED 40 MPH
POSTED SPEED 35 MPH

DISTRIBUTION

K	7.4
D	53.66
T_{24}	28.5%

CRITERIA

(X) NEW CONSTRUCTION / RECONSTRUCTION
( ) RRR INTERSTATE / FREEWAY
( ) RRR NON-INTERSTATE / FREEWAY
( ) TDLC / NEW CONSTRUCTION / RECONSTRUCTION
( ) TDLC / RRR
( ) MANUAL OF UNIFORM MINIMUM STANDARDS (FLORIDA GREENBOOK) (OFF-STATE HIGHWAY SYSTEM ONLY)

DESIGN SPEED APPROVALS

A K Brennan — 3/17/17
DISTRICT DESIGN ENGINEER — DATE

[illegible] — 4/10/17
DISTRICT TRAFFIC OPERATIONS ENGINEER — DATE

LIST ANY POTENTIAL EXCEPTIONS AND VARIATIONS RELATED TO TYPICAL SECTION ELEMENTS:

N/A

LIST MAJOR STRUCTURES LOCATION/DESCRIPTION - REQUIRING INDEPENDENT STRUCTURE DESIGN:

CR 532 (920094, 920095)

LIST MAJOR UTILITIES WITHIN PROJECT CORRIDOR:
GAS (CENTRAL FLORIDA GAS)
WATER (OSCEOLA COUNTY UTILITIES)
COMMUNICATIONS (BRIGHTHOUSE NETWORKS, COMCAST, LEVEL 3, VERIZON)
WASTEWATER (OSCEOLA COUNTY UTILITIES)
ELECTRIC (DUKE ENERGY DISTRIBUTION, DUKE ENERGY TRANSMISSION)

LIST OTHER INFORMATION PERTINENT TO DESIGN OF PROJECT:

N/A

PROJECT IDENTIFICATION

FINANCIAL PROJECT ID 432100-1-22-01 FEDERAL AID PROJECT NO. N/A COUNTY NAME OSCEOLA

SECTION NO. 92130 ROAD DESIGNATION SR 400 (I-4) LIMITS/MILEPOST MP 0.000 - 7.885

PROJECT DESCRIPTION WIDENING SR 400 (I-4) FROM WEST OF CR 532 TO WEST OF SR 435 KIRKMAN ROAD AND FROM 1 MILE EAST OF SR 434 TO 1/2 MILE EAST OF SR 472.

PROPOSED ROADWAY TYPICAL SECTION

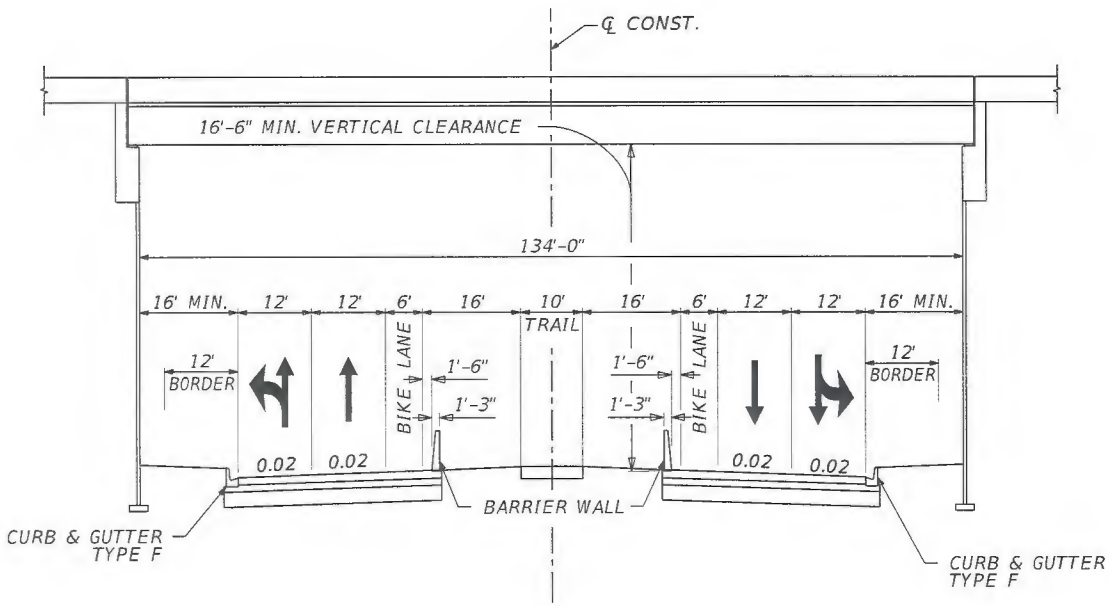

CR 532 ROADWAY SECTION UNDER SR 400 (I-4)
DIVERGING DIAMOND INTERCHANGE

SHEET 1A-13

APPROVED BY	FDOT CONCURRENCE	FHWA CONCURRENCE	COUNTY CONCURRENCE
ROBERT M. DENNEY, P.E. Date Engineer Of Record 58593	ANNETTE K. BRENNAN, P.E. FDOT District Design Engineer 3/17/17 Date	FHWA Transportation Engineer 7/25/17 Date	County Engineer 5/11/17 Date

HNTB CORPORATION
610 CRESCENT EXEC. CT.
SUITE 400
LAKE MARY, FL 32746
(407) 805-0355
CERT OF AUTH NO 6500

ROBERT M. DENNEY LICENSE No. 58593 STATE OF FLORIDA PROFESSIONAL ENGINEER

mbacal 6/9/2017 2:38:19 PM \\LKMw00\pmwork3\Jobs\59219 - I4 SAMR\TECHPROD\Typical Section Package\TYPDRD01-SEG-1.DGN

PROJECT IDENTIFICATION

FINANCIAL PROJECT ID 432100-1-22-01 FEDERAL AID PROJECT NO. N/A COUNTY NAME OSCEOLA

SECTION NO. 92130 ROAD DESIGNATION SR 400 (I-4) LIMITS/MILEPOST MP 0.000 - 7.885

PROJECT DESCRIPTION WIDENING SR 400 (I-4) FROM WEST OF CR 532 TO WEST OF SR 435 KIRKMAN ROAD AND FROM 1 MILE EAST OF SR 434 TO 1/2 MILE EAST OF SR 472.

PROPOSED ROADWAY TYPICAL SECTION

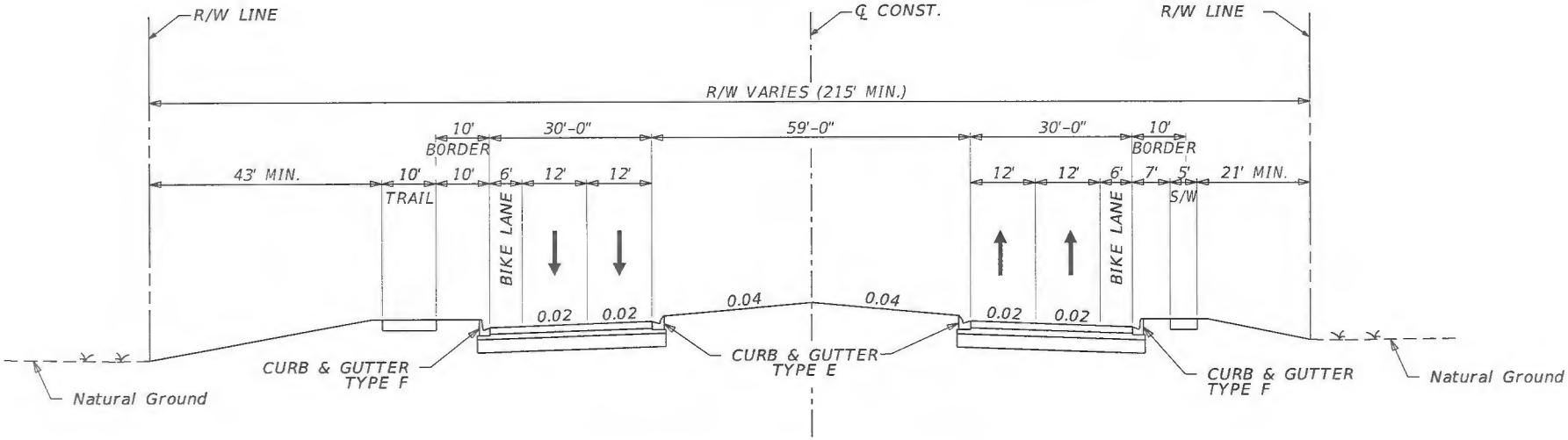

DESIGN SPEED = 40 MPH
CR 532 ROADWAY SECTION
STA 53+00 TO STA 78+00

SHEET 1A-14

APPROVED BY	FDOT CONCURRENCE	FHWA CONCURRENCE	COUNTY CONCURRENCE
ROBERT M. DENNEY, P.E. Engineer of Record 58593 — Date 2/8/17	ANNETTE K. BRENNAN, P.E. FDOT District Design Engineer — Date 3/17/17	FHWA Transportation Engineer — Date 7/25/17	County Engineer — Date 5/11/17

HNTB CORPORATION
610 CRESCENT EXEC. CT.
SUITE 400
LAKE MARY, FL 32746
(407) 805-0355
CERT OF AUTH NO 6500

ROBERT M. DENNEY LICENSE No. 58593 STATE OF FLORIDA PROFESSIONAL ENGINEER

mbacal 7/9/2017 2:38:19 PM \\LKMw00\pmwork3\Jobs\59219 - I4 SAMR\TECHPROD\Typical Section Package\TYPDRD01-SEG-1.DGN

PROJECT IDENTIFICATION

FINANCIAL PROJECT ID 432100-1-22-01 FEDERAL AID PROJECT NO. N/A COUNTY NAME OSCEOLA

SECTION NO. 92130 ROAD DESIGNATION SR 400 (I-4) LIMITS/MILEPOST MP 0.000 - 7.885

PROJECT DESCRIPTION WIDENING SR 400 (I-4) FROM WEST OF CR 532 TO WEST OF SR 435 KIRKMAN ROAD AND FROM 1 MILE EAST OF SR 434 TO 1/2 MILE EAST OF SR 472.

PROPOSED ROADWAY TYPICAL SECTION

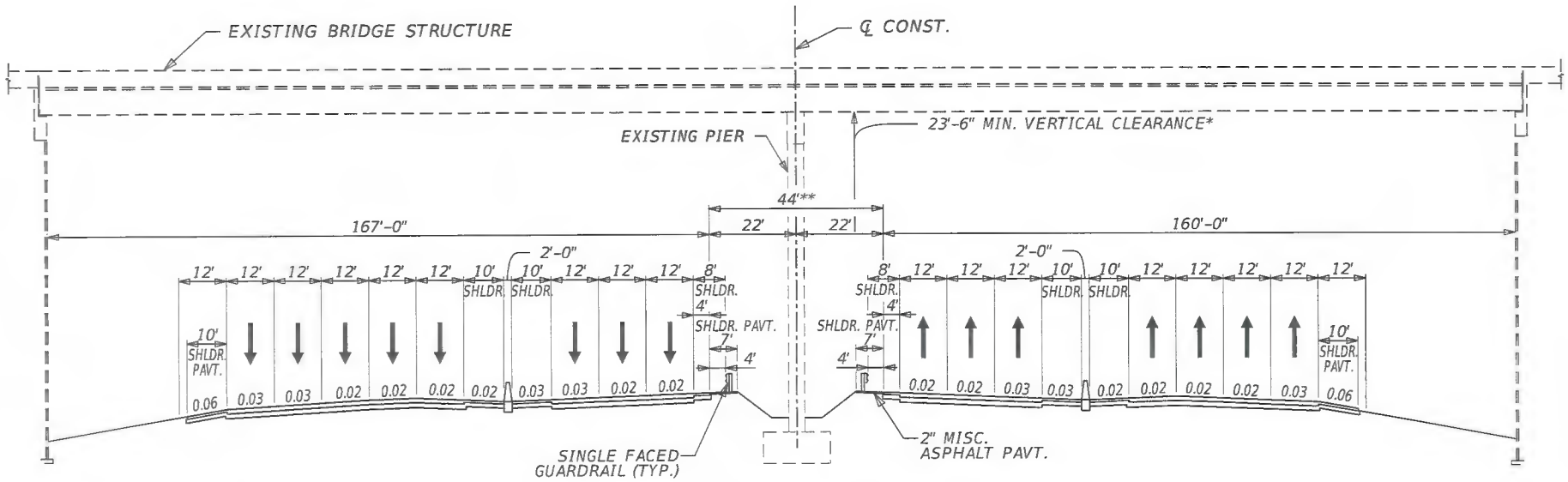

DESIGN SPEED = 70 MPH

SR 400 (I-4) UNDER TRADITION BOULEVARD

* VERTICAL CLEARANCE MEASURED FROM EXPRESS LANE INSIDE EDGE OF TRAVEL TO LOW MEMBER.

** 44' REQUIRED FOR FUTURE RAIL CORRIDOR. FUTURE RAIL CORRIDOR IS MEASURED FROM FACE OF FUTURE INSIDE BARRIER TO FACE OF FUTURE INSIDE BARRIER.

SHEET 1A-15

APPROVED BY	FDOT CONCURRENCE	FHWA CONCURRENCE
HNTB CORPORATION 610 CRESCENT EXEC. CT. SUITE 400 LAKE MARY, FL 32746 (407) 805-0355 CERT OF AUTH NO 6500	ANNETTE K. BRENNAN, P.E. FDOT District Design Engineer Date 3/17/17	FHWA Transportation Engineer Date 7/25/17
ROBERT M. DENNEY, P.E. Engineer Of Record 58593 Date 2/9/17		

ROBERT M. DENNEY LICENSE No. 58593 STATE OF FLORIDA PROFESSIONAL ENGINEER

PROJECT IDENTIFICATION

FINANCIAL PROJECT ID 432100-1-22-01 FEDERAL AID PROJECT NO. N/A COUNTY NAME OSCEOLA

SECTION NO. 92130 ROAD DESIGNATION SR 400 (I-4) LIMITS/MILEPOST MP 0.000 - 7.885

PROJECT DESCRIPTION WIDENING SR 400 (I-4) FROM WEST OF CR 532 TO WEST OF SR 435 KIRKMAN ROAD AND FROM 1 MILE EAST OF SR 434 TO 1/2 MILE EAST OF SR 472.

PROPOSED ROADWAY TYPICAL SECTION

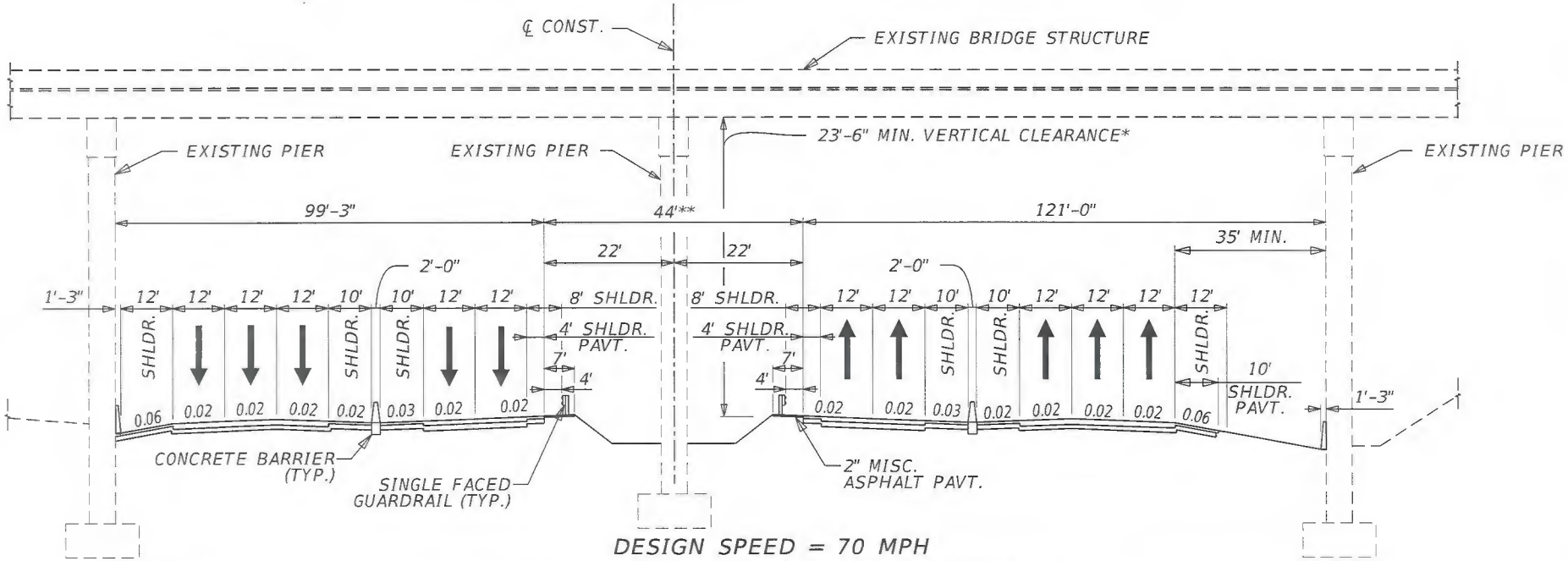

DESIGN SPEED = 70 MPH

SR 400 (I-4) UNDER SR 429 NORTHBOUND RAMP

* VERTICAL CLEARANCE MEASURED FROM EXPRESS LANE INSIDE EDGE OF TRAVEL TO LOW MEMBER.

** 44' REQUIRED FOR FUTURE RAIL CORRIDOR. FUTURE RAIL CORRIDOR IS MEASURED FROM FACE OF FUTURE INSIDE BARRIER TO FACE OF FUTURE INSIDE BARRIER.

SHEET 1A-16

APPROVED BY	FDOT CONCURRENCE	FHWA CONCURRENCE
ROBERT M. DENNEY, P.E. Date Engineer Of Record 58593 HNTB CORPORATION 610 CRESCENT EXEC. CT. SUITE 400 LAKE MARY, FL 32746 (407) 805-0355 CERT OF AUTH NO 6500	ANNETTE K. BRENNAN, P.E. FDOT District Design Engineer 3/17/17 Date	FHWA Transportation Engineer 7/25/17 Date

ROBERT M. DENNEY LICENSE No. 58593 STATE OF FLORIDA PROFESSIONAL ENGINEER

mbacal 7/19/2017 2:38:20 PM \\LKMw00\pmwork3\Jobs\59219 - I4 SAMR\TECHPROD\Typical Section Package\TYPDRD01-SEG-1.DGN

PROJECT IDENTIFICATION

FINANCIAL PROJECT ID 432100-1-22-01 FEDERAL AID PROJECT NO. N/A COUNTY NAME OSCEOLA

SECTION NO. 92130 ROAD DESIGNATION SR 400 (I-4) LIMITS/MILEPOST MP 0.000 - 7.885

PROJECT DESCRIPTION WIDENING SR 400 (I-4) FROM WEST OF CR 532 TO WEST OF SR 435 KIRKMAN ROAD AND FROM 1 MILE EAST OF SR 434 TO 1/2 MILE EAST OF SR 472.

PROPOSED ROADWAY TYPICAL SECTION

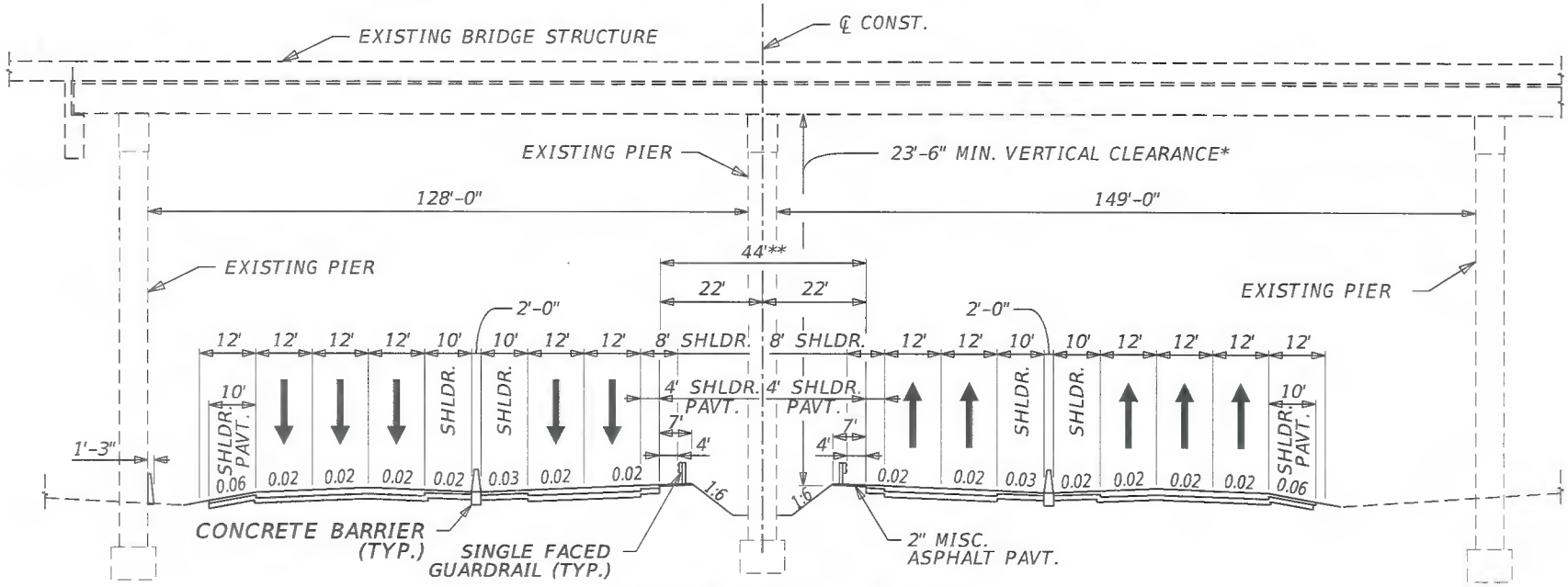

DESIGN SPEED = 70 MPH

SR 400 (I-4) UNDER SR 429 SOUTHBOUND TO EASTBOUND I-4

* VERTICAL CLEARANCE MEASURED FROM EXPRESS LANE INSIDE EDGE OF TRAVEL TO LOW MEMBER.

** 44' REQUIRED FOR FUTURE RAIL CORRIDOR. FUTURE RAIL CORRIDOR IS MEASURED FROM FACE OF FUTURE INSIDE BARRIER TO FACE OF FUTURE INSIDE BARRIER.

SHEET 1A-17

APPROVED BY	FDOT CONCURRENCE	FHWA CONCURRENCE
CERTIFICATE OF AUTHORIZATION HNTB CORPORATION 610 CRESCENT EXEC. CT. SUITE 400 LAKE MARY, FL 32746 (407) 805-0355 CERT OF AUTH NO 6500 ROBERT M. DENNEY, P.E. Date 7/18/17 Engineer of Record 58593	A K Brennan 3/17/17 ANNETTE K. BRENNAN, P.E. FDOT District Design Engineer Date	FHWA Transportation Engineer 7/25/17 Date

ROBERT M. DENNEY LICENSE No. 58593 STATE OF FLORIDA PROFESSIONAL ENGINEER

mbacal 7/18/2017 2:38:20 PM \\LKMw00\pmwork3\Jobs\59219 - I4 SAMR\TECHPROD\Typical Section Package\TYPDRD01-SEG-1.DGN

PROJECT IDENTIFICATION

FINANCIAL PROJECT ID: 432100-1-22-01 COUNTY (SECTION): OSCEOLA (92130)

PROJECT DESCRIPTION: WIDENING SR 400 (I-4) FROM WEST OF CR 532 TO WEST OF SR 435 (KIRKMAN RD.) AND FROM 1 MILE EAST OF SR 434 TO 1/2 MILE EAST OF SR 472.

PROJECT CONTROLS (OLD LAKE WILSON ROAD)

FUNCTIONAL CLASSIFICATION

( ) RURAL
(X) URBAN

( ) FREEWAY/EXPWY. ( ) MAJOR COLL.
( ) PRINCIPAL ART. ( ) MINOR COLL.
(X) MINOR ART. ( ) LOCAL

HIGHWAY SYSTEM

Yes	No	
( )	(X)	NATIONAL HIGHWAY SYSTEM
( )	(X)	FLORIDA INTRASTATE HIGHWAY SYSTEM
( )	(X)	STRATEGIC INTERMODAL SYSTEM
( )	(X)	STATE HIGHWAY SYSTEM
(X)	( )	OFF STATE HIGHWAY SYSTEM

ACCESS CLASSIFICATION

( ) 1 - FREEWAY
( ) 2 - RESTRICTIVE w/Service Roads
( ) 3 - RESTRICTIVE w/660 ft. Connection Spacing
(X) 4 - NON-RESTRICTIVE w/2640 ft. Signal Spacing
( ) 5 - RESTRICTIVE w/440 ft. Connection Spacing
( ) 6 - NON-RESTRICTIVE w/1320 ft. Signal Spacing
( ) 7 - BOTH MEDIAN TYPES

TRAFFIC

	YEAR	AADT
OPENING	2020	15,949
INTERIM	2030	25,979
DESIGN	2040	43,317

DESIGN SPEED 45 MPH
POSTED SPEED 45 MPH

DISTRIBUTION

K	7.4
D	53.66
T_{24}	5.0%

CRITERIA

(X) NEW CONSTRUCTION / RECONSTRUCTION
( ) RRR INTERSTATE / FREEWAY
( ) RRR NON-INTERSTATE / FREEWAY
( ) TDLC / NEW CONSTRUCTION / RECONSTRUCTION
( ) TDLC / RRR
( ) MANUAL OF UNIFORM MINIMUM STANDARDS (FLORIDA GREENBOOK) (OFF-STATE HIGHWAY SYSTEM ONLY)

DESIGN SPEED APPROVALS

AK Brennan — 3/17/17
DISTRICT DESIGN ENGINEER — DATE

Jarmal Stay — 4/10/17
DISTRICT TRAFFIC OPERATIONS ENGINEER — DATE

LIST ANY POTENTIAL EXCEPTIONS AND VARIATIONS RELATED TO TYPICAL SECTION ELEMENTS:

N/A

LIST MAJOR STRUCTURES LOCATION/DESCRIPTION - REQUIRING INDEPENDENT STRUCTURE DESIGN:

OLD LAKE WILSON ROAD (924179)

LIST MAJOR UTILITIES WITHIN PROJECT CORRIDOR:
GAS (CENTRAL FLORIDA GAS)
WATER (OSCEOLA COUNTY UTILITIES)
COMMUNICATIONS (BRIGHTHOUSE NETWORKS, COMCAST, LEVEL 3, VERIZON)
WASTEWATER (OSCEOLA COUNTY UTILITIES)
ELECTRIC (DUKE ENERGY DISTRIBUTION, DUKE ENERGY TRANSMISSION)

LIST OTHER INFORMATION PERTINENT TO DESIGN OF PROJECT:

N/A

PROJECT IDENTIFICATION

FINANCIAL PROJECT ID 432100-1-22-01 FEDERAL AID PROJECT NO. N/A COUNTY NAME OSCEOLA

SECTION NO. 92130 ROAD DESIGNATION SR 400 (I-4) LIMITS/MILEPOST MP 0.000 - 7.885

PROJECT DESCRIPTION WIDENING SR 400 (I-4) FROM WEST OF CR 532 TO WEST OF SR 435 KIRKMAN ROAD AND FROM 1 MILE EAST OF SR 434 TO 1/2 MILE EAST OF SR 472.

PROPOSED ROADWAY TYPICAL SECTION

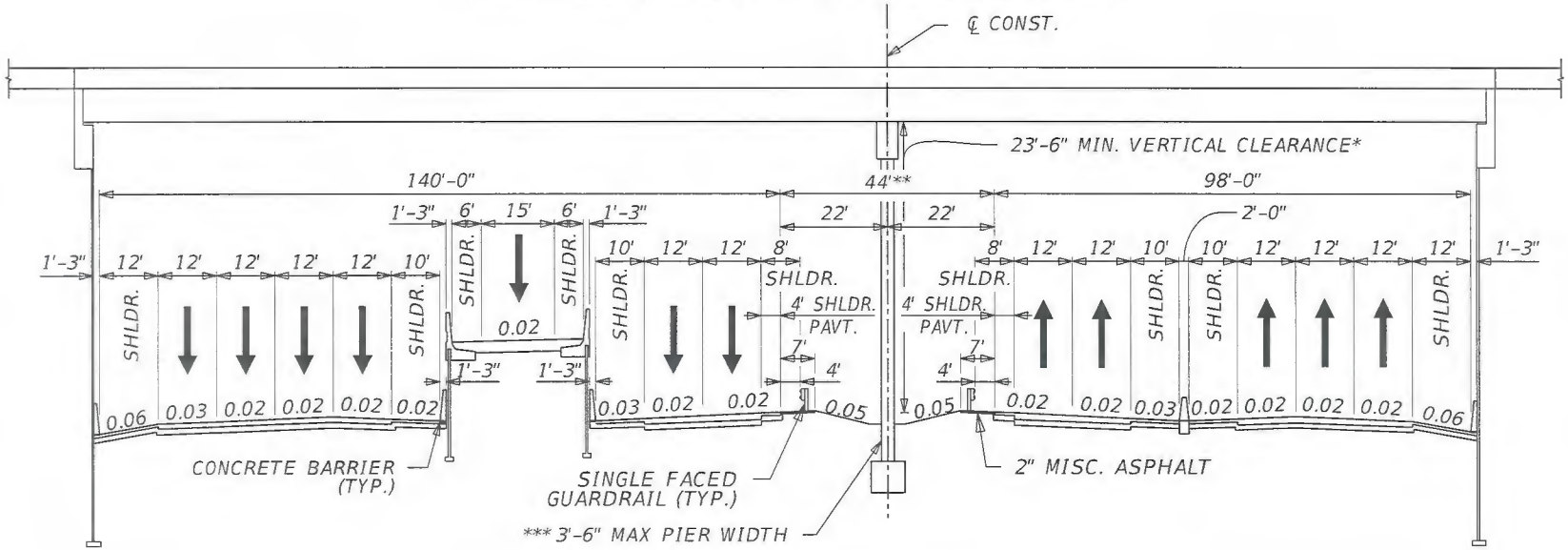

DESIGN SPEED = 70 MPH

SR 400 (I-4) UNDER OLD LAKE WILSON ROAD

* VERTICAL CLEARANCE MEASURED FROM EXPRESS LANE INSIDE EDGE OF TRAVEL TO LOW MEMBER.

** 44' REQUIRED FOR FUTURE RAIL CORRIDOR. FUTURE RAIL CORRIDOR IS MEASURED FROM FACE OF FUTURE INSIDE BARRIER TO FACE OF FUTURE INSIDE BARRIER.

*** 3'-6" MAXIMUM PIER WIDTH ALLOWED.

SHEET 1A-19

ROBERT M. DENNEY LICENSE No. 58593 STATE OF FLORIDA PROFESSIONAL ENGINEER

APPROVED BY	FDOT CONCURRENCE	FHWA CONCURRENCE
ROBERT M. DENNEY, P.E. Date Engineer Of Record 58593 HNTB CORPORATION 610 CRESCENT EXEC. CT. SUITE 400 LAKE MARY, FL 32746 (407) 805-0355 CERT OF AUTH NO 6500	ANNETTE K. BRENNAN, P.E. FDOT District Design Engineer Date 3/17/17	FHWA Transportation Engineer Date 7/25/17

mbacal 2/9/2017 2:38:23 PM \\LKMw00\pmwork3\Jobs\59219 - I4 SAMR\TECHPROD\Typical Section Package\TYPDRD01-SEG-1.DGN

PROJECT IDENTIFICATION

FINANCIAL PROJECT ID 432100-1-22-01 FEDERAL AID PROJECT NO. N/A COUNTY NAME OSCEOLA

SECTION NO. 92130 ROAD DESIGNATION SR 400 (I-4) LIMITS/MILEPOST MP 0.000 - 7.885

PROJECT DESCRIPTION WIDENING SR 400 (I-4) FROM WEST OF CR 532 TO WEST OF SR 435 KIRKMAN ROAD AND FROM 1 MILE EAST OF SR 434 TO 1/2 MILE EAST OF SR 472.

PROPOSED STRUCTURE TYPICAL SECTION

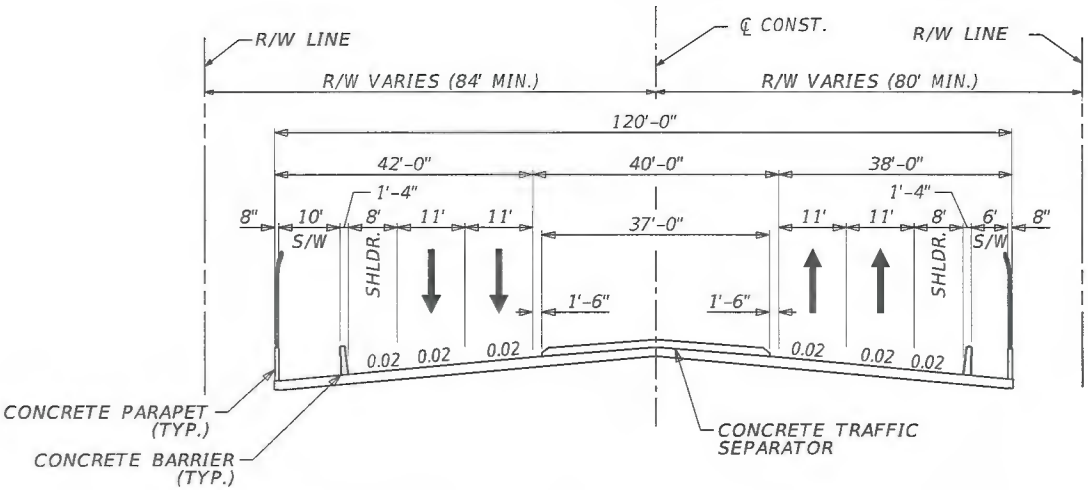

DESIGN SPEED = 45 MPH

OLD LAKE WILSON ROAD BRIDGE OVER SR 400 (I-4)

SHEET 1A-20

APPROVED BY	FDOT CONCURRENCE	FHWA CONCURRENCE	COUNTY CONCURRENCE
ROBERT M. DENNEY, P.E. Date Engineer Of Record 58593	ANNETTE K. BRENNAN, P.E. FDOT District Design Engineer 3/17/17 Date	FHWA Transportation Engineer 7/25/17 Date	County Engineer 5/11/17 Date

HNTB CORPORATION
610 CRESCENT EXEC. CT.
SUITE 400
LAKE MARY, FL 32746
(407) 805-0355
CERT OF AUTH NO 6500

ROBERT M. DENNEY LICENSE No. 58593 STATE OF FLORIDA PROFESSIONAL ENGINEER

mbacal 2/9/2017 2:38:23 PM \\LKMw00\pmwork3\Jobs\59219 - I4 SAMR\TECHPROD\Typical Section Package\TYPDRD01-SEG-1.DGN

PROJECT IDENTIFICATION

FINANCIAL PROJECT ID 432100-1-22-01 FEDERAL AID PROJECT NO. N/A COUNTY NAME OSCEOLA

SECTION NO. 92130 ROAD DESIGNATION SR 400 (I-4) LIMITS/MILEPOST MP 0.000 - 7.885

PROJECT DESCRIPTION WIDENING SR 400 (I-4) FROM WEST OF CR 532 TO WEST OF SR 435 KIRKMAN ROAD AND FROM 1 MILE EAST OF SR 434 TO 1/2 MILE EAST OF SR 472.

PROPOSED ROADWAY TYPICAL SECTION

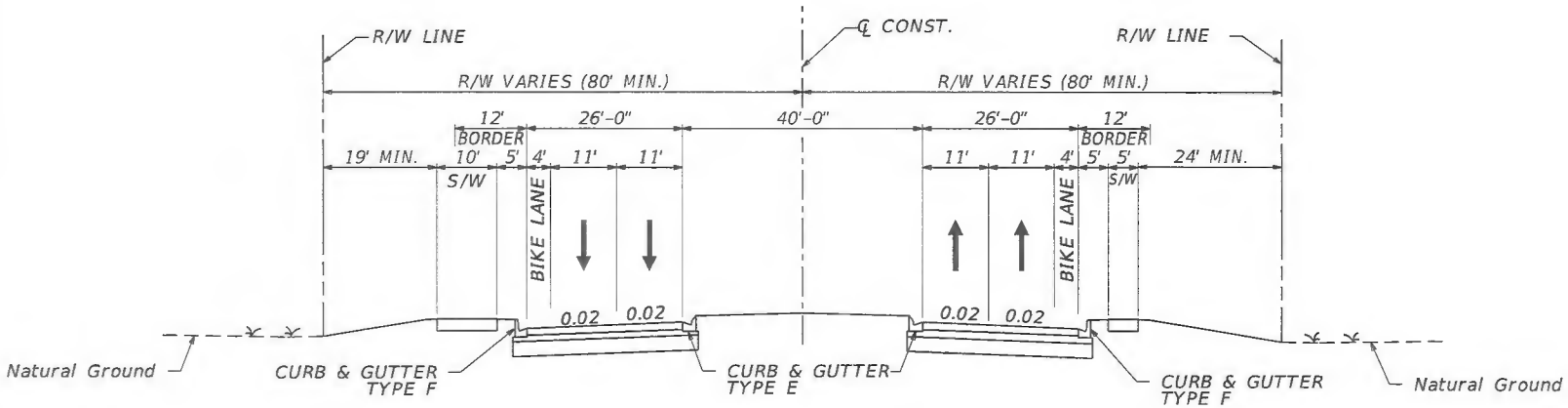

DESIGN SPEED = 45 MPH
OLD LAKE WILSON ROAD

SHEET 1A-21

APPROVED BY	FDOT CONCURRENCE	FHWA CONCURRENCE	COUNTY CONCURRENCE
ROBERT M. DENNEY, P.E. Engineer Of Record 58593 — Date 2/9/17	ANNETTE K. BRENNAN, P.E. FDOT District Design Engineer — Date 3/17/17	FHWA Transportation Engineer — Date 7/25/17	County Engineer — Date 5/11/17

HNTB CORPORATION
610 CRESCENT EXEC. CT.
SUITE 400
LAKE MARY, FL 32746
(407) 805-0355
CERT OF AUTH NO 6500

ROBERT M. DENNEY LICENSE No. 58593 STATE OF FLORIDA PROFESSIONAL ENGINEER

mbacal 2/9/2017 2:38:24 PM \\LKMw00\pmwork3\Jobs\59219 - I4 SAMR\TECHPROD\Typical Section Package\TYPDRD01-SEG-1.DGN

PROJECT IDENTIFICATION

FINANCIAL PROJECT ID: 432100-1-22-01 COUNTY (SECTION): OSCEOLA (92130)

PROJECT DESCRIPTION: WIDENING SR 400 (I-4) FROM WEST OF CR 532 TO WEST OF SR 435 (KIRKMAN RD.) AND FROM 1 MILE EAST OF SR 434 TO 1/2 MILE EAST OF SR 472.

PROJECT CONTROLS (WORLD DRIVE)

FUNCTIONAL CLASSIFICATION

( ) RURAL
(X) URBAN

( ) FREEWAY/EXPWY. ( ) MAJOR COLL.
( ) PRINCIPAL ART. ( ) MINOR COLL.
(X) MINOR ART. ( ) LOCAL

HIGHWAY SYSTEM

Yes	No	
( )	(X)	NATIONAL HIGHWAY SYSTEM
( )	(X)	FLORIDA INTRASTATE HIGHWAY SYSTEM
( )	(X)	STRATEGIC INTERMODAL SYSTEM
( )	(X)	STATE HIGHWAY SYSTEM
(X)	( )	OFF STATE HIGHWAY SYSTEM

ACCESS CLASSIFICATION

( ) 1 - FREEWAY
(X) 2 - RESTRICTIVE w/Service Roads
( ) 3 - RESTRICTIVE w/660 ft. Connection Spacing
( ) 4 - NON-RESTRICTIVE w/2640 ft. Signal Spacing
( ) 5 - RESTRICTIVE w/440 ft. Connection Spacing
( ) 6 - NON-RESTRICTIVE w/1320 ft. Signal Spacing
( ) 7 - BOTH MEDIAN TYPES

TRAFFIC

	YEAR	AADT
OPENING	2020	29,000
INTERIM	2030	34,000
DESIGN	2040	39,000

		DISTRIBUTION	
DESIGN SPEED	40 MPH	K	7.4
POSTED SPEED	35 MPH	D	53.66
		T 24	3.2%

CRITERIA

(X) NEW CONSTRUCTION / RECONSTRUCTION
( ) RRR INTERSTATE / FREEWAY
( ) RRR NON-INTERSTATE / FREEWAY
( ) TDLC / NEW CONSTRUCTION / RECONSTRUCTION
( ) TDLC / RRR
( ) MANUAL OF UNIFORM MINIMUM STANDARDS (FLORIDA GREENBOOK) (OFF-STATE HIGHWAY SYSTEM ONLY)

DESIGN SPEED APPROVALS

A K Brennan — 3/17/17
DISTRICT DESIGN ENGINEER — DATE

4/10/17
DISTRICT TRAFFIC OPERATIONS ENGINEER — DATE

LIST ANY POTENTIAL EXCEPTIONS AND VARIATIONS RELATED TO TYPICAL SECTION ELEMENTS:

N/A

LIST MAJOR STRUCTURES LOCATION/DESCRIPTION - REQUIRING INDEPENDENT STRUCTURE DESIGN:

WORLD DRIVE (920176, 920170)

LIST MAJOR UTILITIES WITHIN PROJECT CORRIDOR:
GAS (CENTRAL FLORIDA GAS)
WATER (OSCEOLA COUNTY UTILITIES)
COMMUNICATIONS (BRIGHTHOUSE NETWORKS, COMCAST, LEVEL 3, VERIZON)
WASTEWATER (OSCEOLA COUNTY UTILITIES)
ELECTRIC (DUKE ENERGY DISTRIBUTION, DUKE ENERGY TRANSMISSION)

LIST OTHER INFORMATION PERTINENT TO DESIGN OF PROJECT:

N/A

PROJECT IDENTIFICATION

FINANCIAL PROJECT ID 432100-1-22-01 FEDERAL AID PROJECT NO. N/A COUNTY NAME OSCEOLA

SECTION NO. 92130 ROAD DESIGNATION SR 400 (I-4) LIMITS/MILEPOST MP 0.000 - 7.885

PROJECT DESCRIPTION WIDENING SR 400 (I-4) FROM WEST OF CR 532 TO WEST OF SR 435 KIRKMAN ROAD AND FROM 1 MILE EAST OF SR 434 TO 1/2 MILE EAST OF SR 472.

PROPOSED STRUCTURE TYPICAL SECTION

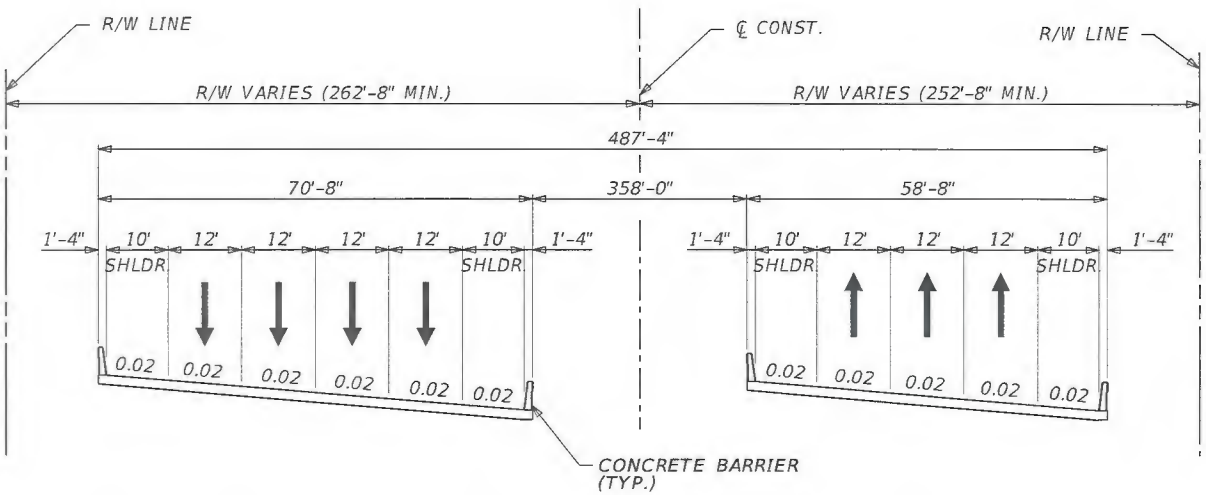

DESIGN SPEED = 40 MPH

WORLD DRIVE BRIDGE OVER SR 400 (I-4)

SHEET 1A-23

APPROVED BY	FDOT CONCURRENCE	FHWA CONCURRENCE	COUNTY CONCURRENCE
ROBERT M. DENNEY, P.E. Engineer Of Record 58593 — Date 2/19/17	ANNETTE K. BRENNAN, P.E. FDOT District Design Engineer — Date 3/17/17	FHWA Transportation Engineer — Date 7/25/17	County Engineer — Date 5/11/17
HNTB CORPORATION 610 CRESCENT EXEC. CT. SUITE 400 LAKE MARY, FL 32746 (407) 805-0355 CERT OF AUTH NO 6500			

ROBERT M. DENNEY LICENSE No. 58593 STATE OF FLORIDA PROFESSIONAL ENGINEER

PROJECT IDENTIFICATION

FINANCIAL PROJECT ID 432100-1-22-01 FEDERAL AID PROJECT NO. N/A COUNTY NAME OSCEOLA

SECTION NO. 92130 ROAD DESIGNATION SR 400 (I-4) LIMITS/MILEPOST MP 0.000 - 7.885

PROJECT DESCRIPTION WIDENING SR 400 (I-4) FROM WEST OF CR 532 TO WEST OF SR 435 KIRKMAN ROAD AND FROM 1 MILE EAST OF SR 434 TO 1/2 MILE EAST OF SR 472.

PROPOSED ROADWAY TYPICAL SECTION

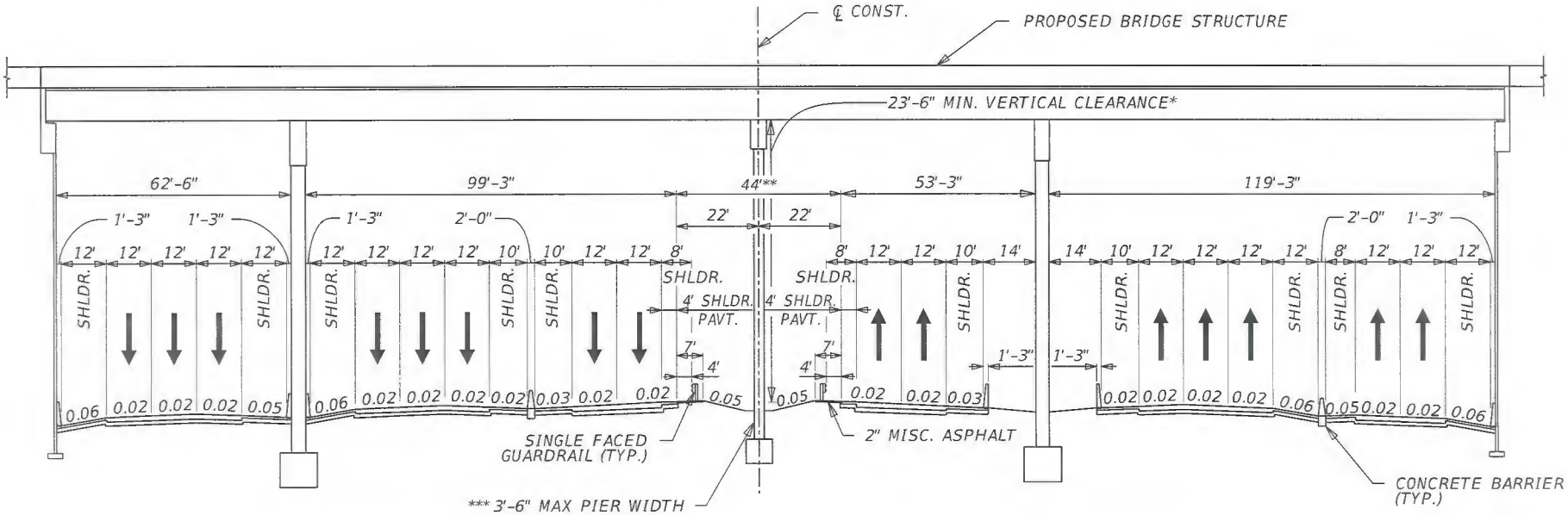

DESIGN SPEED = 70 MPH

SR 400 (I-4) UNDER EASTBOUND AND WESTBOUND WORLD DRIVE

* VERTICAL CLEARANCE MEASURED FROM EXPRESS LANE INSIDE EDGE OF TRAVEL TO LOW MEMBER.

** 44' REQUIRED FOR FUTURE RAIL CORRIDOR. FUTURE RAIL CORRIDOR IS MEASURED FROM FACE OF FUTURE INSIDE BARRIER TO FACE OF FUTURE INSIDE BARRIER.

*** 3'-6" MAXIMUM PIER WIDTH ALLOWED.

SHEET 1A-24

APPROVED BY	FDOT CONCURRENCE	FHWA CONCURRENCE
ROBERT M. DENNEY, P.E. Engineer of Record 58593 — Date 2/9/17	ANNETTE K. BRENNAN, P.E. FDOT District Design Engineer — Date 3/17/17	FHWA Transportation Engineer — Date 7/25/17

HNTB CORPORATION
610 CRESCENT EXEC. CT.
SUITE 400
LAKE MARY, FL 32746
(407) 805-0355
CERT OF AUTH NO 6500

ROBERT M. DENNEY LICENSE No. 58593 STATE OF FLORIDA PROFESSIONAL ENGINEER

mbacal 2/9/2017 2:38:26 PM \\LKMw00\pmwork3\Jobs\59219 - I4 SAMR\TECHPROD\Typical Section Package\TYPDRD01-SEG-1.DGN

PROJECT IDENTIFICATION

FINANCIAL PROJECT ID 432100-1-22-01 FEDERAL AID PROJECT NO. N/A COUNTY NAME OSCEOLA

SECTION NO. 92130 ROAD DESIGNATION SR 400 (I-4) LIMITS/MILEPOST MP 0.000 - 7.885

PROJECT DESCRIPTION WIDENING SR 400 (I-4) FROM WEST OF CR 532 TO WEST OF SR 435 KIRKMAN ROAD AND FROM 1 MILE EAST OF SR 434 TO 1/2 MILE EAST OF SR 472.

PROPOSED ROADWAY TYPICAL SECTION

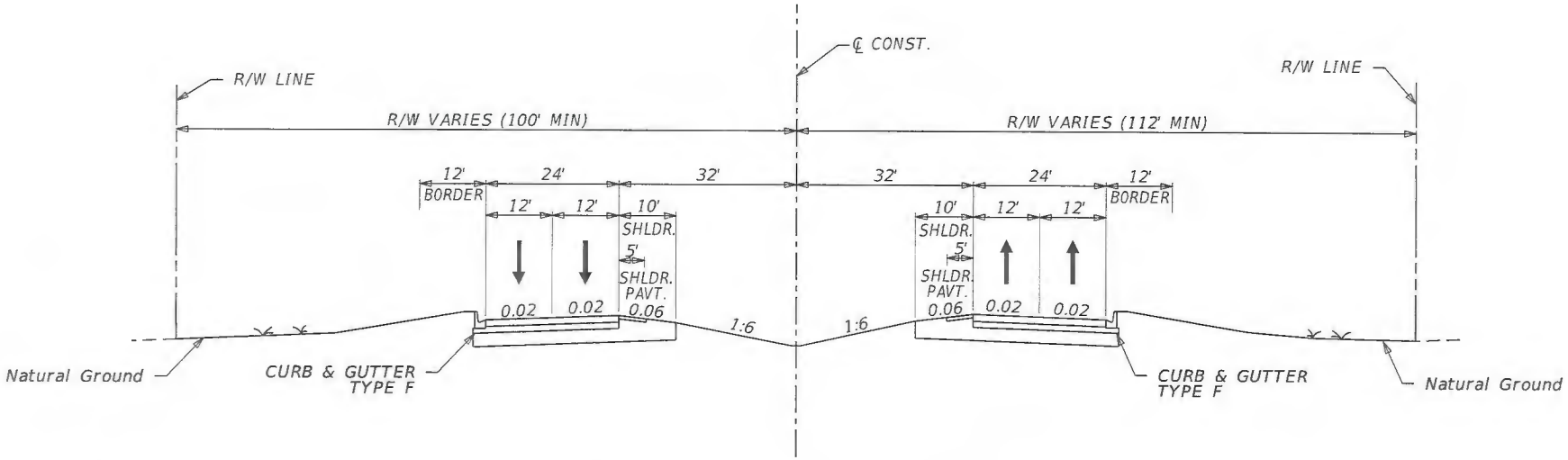

DESIGN SPEED = 40 MPH

WORLD DRIVE ROADWAY SECTION

SHEET 1A-25

APPROVED BY	FDOT CONCURRENCE	FHWA CONCURRENCE	COUNTY CONCURRENCE
ROBERT M. DENNEY, P.E. Engineer of Record 58593 — Date 3/17/17	ANNETTE K. BRENNAN, P.E. FDOT District Design Engineer — Date 3/17/17	FHWA Transportation Engineer — Date 7/25/17	County Engineer — Date 6/11/17

HNTB CORPORATION
610 CRESCENT EXEC. CT.
SUITE 400
LAKE MARY, FL 32746
(407) 805-0355
CERT OF AUTH NO 6500

ROBERT M. DENNEY LICENSE No. 58593 STATE OF FLORIDA PROFESSIONAL ENGINEER

mbacal 2/8/2017 2:38:27 PM \\LKMw00\pmwork3\Jobs\59219 - 14 SAMR\TECHPROD\Typical Section Package\TYPDRD01-SEG-1.DGN

PROJECT IDENTIFICATION

FINANCIAL PROJECT ID: 432100-1-22-01 COUNTY (SECTION): OSCEOLA (92130)

PROJECT DESCRIPTION: WIDENING SR 400 (I-4) FROM WEST OF CR 532 TO WEST OF SR 435 (KIRKMAN RD.) AND FROM 1 MILE EAST OF SR 434 TO 1/2 MILE EAST OF SR 472.

PROJECT CONTROLS (SR 417)

FUNCTIONAL CLASSIFICATION

( ) RURAL
(X) URBAN

( ) FREEWAY/EXPWY. ( ) MAJOR COLL.
(X) PRINCIPAL ART. ( ) MINOR COLL.
( ) MINOR ART. ( ) LOCAL

HIGHWAY SYSTEM

Yes	No	
(X)	( )	NATIONAL HIGHWAY SYSTEM
( )	(X)	FLORIDA INTRASTATE HIGHWAY SYSTEM
(X)	( )	STRATEGIC INTERMODAL SYSTEM
(X)	( )	STATE HIGHWAY SYSTEM
( )	(X)	OFF STATE HIGHWAY SYSTEM

ACCESS CLASSIFICATION

(X) 1 - FREEWAY
( ) 2 - RESTRICTIVE w/Service Roads
( ) 3 - RESTRICTIVE w/660 ft. Connection Spacing
( ) 4 - NON-RESTRICTIVE w/2640 ft. Signal Spacing
( ) 5 - RESTRICTIVE w/440 ft. Connection Spacing
( ) 6 - NON-RESTRICTIVE w/1320 ft. Signal Spacing
( ) 7 - BOTH MEDIAN TYPES

TRAFFIC

	YEAR	AADT
OPENING	2020	28,000
INTERIM	2030	33,000
DESIGN	2040	38,000

DESIGN SPEED 55 MPH
POSTED SPEED 50 MPH

DISTRIBUTION

K	7.4
D	53.66
T_{24}	12.2%

CRITERIA

(X) NEW CONSTRUCTION / RECONSTRUCTION
( ) RRR INTERSTATE / FREEWAY
( ) RRR NON-INTERSTATE / FREEWAY
( ) TDLC / NEW CONSTRUCTION / RECONSTRUCTION
( ) TDLC / RRR
( ) MANUAL OF UNIFORM MINIMUM STANDARDS (FLORIDA GREENBOOK) (OFF-STATE HIGHWAY SYSTEM ONLY)

DESIGN SPEED APPROVALS

AK Brennan — 3/17/17
DISTRICT DESIGN ENGINEER — DATE

James Stutz Jr — 4/10/17
DISTRICT TRAFFIC OPERATIONS ENGINEER — DATE

LIST ANY POTENTIAL EXCEPTIONS AND VARIATIONS RELATED TO TYPICAL SECTION ELEMENTS:

N/A

LIST MAJOR STRUCTURES LOCATION/DESCRIPTION - REQUIRING INDEPENDENT STRUCTURE DESIGN:

SR 417 (920169)

LIST MAJOR UTILITIES WITHIN PROJECT CORRIDOR:
GAS (CENTRAL FLORIDA GAS)
WATER (OSCEOLA COUNTY UTILITIES)
COMMUNICATIONS (BRIGHTHOUSE NETWORKS, COMCAST, LEVEL 3, VERIZON)
WASTEWATER (OSCEOLA COUNTY UTILITIES)
ELECTRIC (DUKE ENERGY DISTRIBUTION, DUKE ENERGY TRANSMISSION)

LIST OTHER INFORMATION PERTINENT TO DESIGN OF PROJECT:

N/A

PROJECT IDENTIFICATION

FINANCIAL PROJECT ID 432100-1-22-01 FEDERAL AID PROJECT NO. N/A COUNTY NAME OSCEOLA

SECTION NO. 92130 ROAD DESIGNATION SR 400 (I-4) LIMITS/MILEPOST MP 0.000 - 7.885

PROJECT DESCRIPTION WIDENING SR 400 (I-4) FROM WEST OF CR 532 TO WEST OF SR 435 KIRKMAN ROAD AND FROM 1 MILE EAST OF SR 434 TO 1/2 MILE EAST OF SR 472.

PROPOSED STRUCTURE TYPICAL SECTION

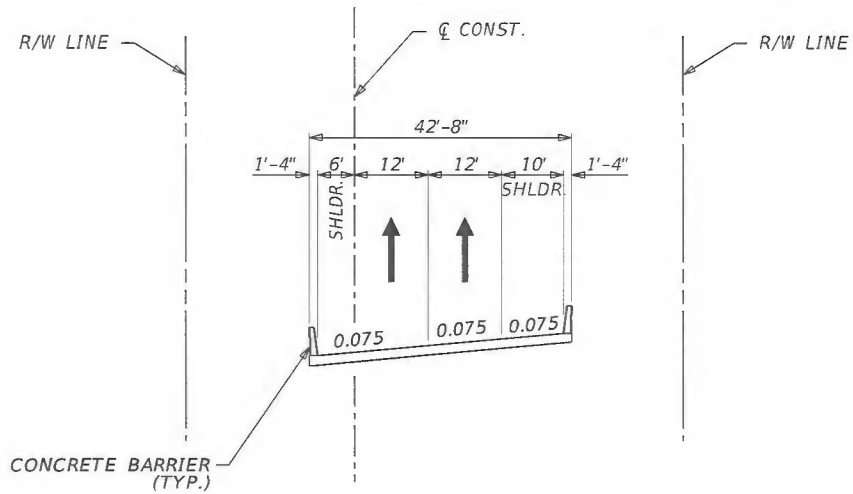

DESIGN SPEED = 55 MPH

SR 417 SOUTHBOUND BRIDGE SECTION

SHEET 1A-27

APPROVED BY	FDOT CONCURRENCE	FHWA CONCURRENCE
ROBERT M. DENNEY, P.E. Engineer Of Record 58593 — Date 7/21/17	ANNETTE K. BRENNAN, P.E. FDOT District Design Engineer — Date 3/17/17	FHWA Transportation Engineer — Date 7/25/17

HNTB CORPORATION
610 CRESCENT EXEC. CT.
SUITE 400
LAKE MARY, FL 32746
(407) 805-0355
CERT OF AUTH NO 6500

ROBERT M. DENNEY LICENSE NO. 58593 STATE OF FLORIDA PROFESSIONAL ENGINEER

PROJECT IDENTIFICATION

FINANCIAL PROJECT ID 432100-1-22-01 FEDERAL AID PROJECT NO. N/A COUNTY NAME OSCEOLA

SECTION NO. 92130 ROAD DESIGNATION SR 400 (I-4) LIMITS/MILEPOST MP 0.000 - 7.885

PROJECT DESCRIPTION WIDENING SR 400 (I-4) FROM WEST OF CR 532 TO WEST OF SR 435 KIRKMAN ROAD AND FROM 1 MILE EAST OF SR 434 TO 1/2 MILE EAST OF SR 472.

PROPOSED ROADWAY TYPICAL SECTION

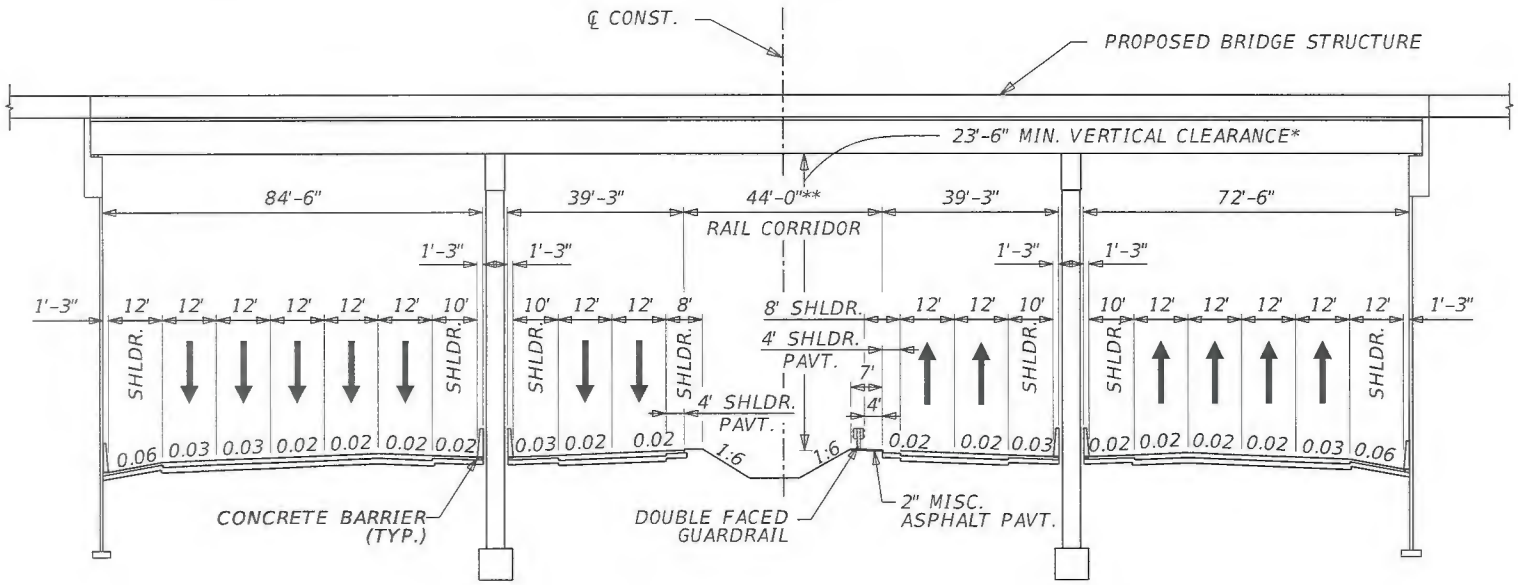

DESIGN SPEED = 70 MPH

SR 400 (I-4) UNDER SR 417 SOUTHBOUND

* VERTICAL CLEARANCE MEASURED FROM EXPRESS LANE INSIDE EDGE OF TRAVEL TO LOW MEMBER.

** 44' REQUIRED FOR FUTURE RAIL CORRIDOR. FUTURE RAIL CORRIDOR IS MEASURED FROM FACE OF FUTURE INSIDE BARRIER TO FACE OF FUTURE INSIDE BARRIER.

SHEET 1A-28

APPROVED BY	FDOT CONCURRENCE	FHWA CONCURRENCE
ROBERT M. DENNEY, P.E. Date Engineer Of Record 58593	ANNETTE K. BRENNAN, P.E. FDOT District Design Engineer 3/17/17 Date	FHWA Transportation Engineer 7/25/17 Date

HNTB CORPORATION
610 CRESCENT EXEC. CT.
SUITE 400
LAKE MARY, FL 32746
(407) 805-0355
CERT OF AUTH NO 6500

ROBERT M. DENNEY LICENSE No. 58593 STATE OF FLORIDA PROFESSIONAL ENGINEER

mbacal 2/9/2017 2:38:29 PM \\LKMw00\pmwork3\Jobs\59219 - I4 SAMR\TECHPROD\Typical Section Package\TYPDRD01-SEG-1.DGN

PROJECT IDENTIFICATION

FINANCIAL PROJECT ID 432100-1-22-01 FEDERAL AID PROJECT NO. N/A COUNTY NAME OSCEOLA

SECTION NO. 92130 ROAD DESIGNATION SR 400 (I-4) LIMITS/MILEPOST MP 0.000 - 7.885

PROJECT DESCRIPTION WIDENING SR 400 (I-4) FROM WEST OF CR 532 TO WEST OF SR 435 KIRKMAN ROAD AND FROM 1 MILE EAST OF SR 434 TO 1/2 MILE EAST OF SR 472.

PROPOSED STRUCTURE TYPICAL SECTION

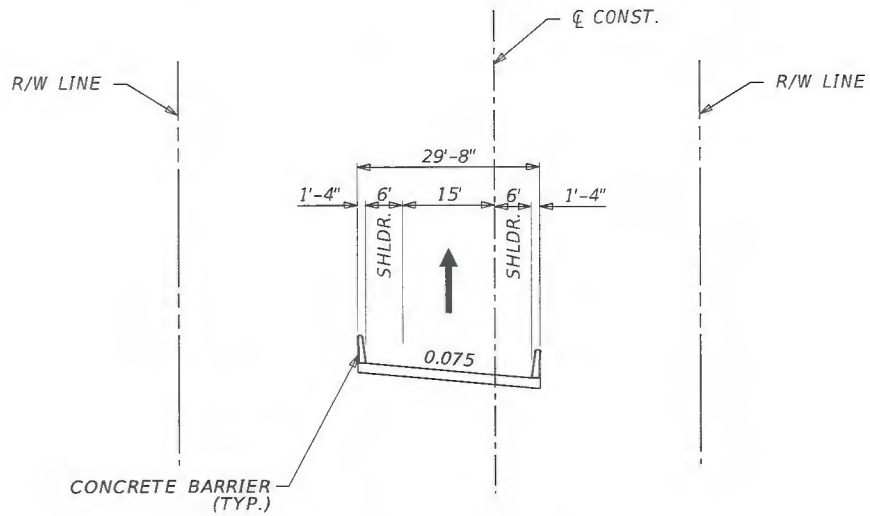

DESIGN SPEED = 50 MPH

SR 417 NORTHBOUND BRIDGE SECTION

SHEET 1A-29

APPROVED BY	FDOT CONCURRENCE	FHWA CONCURRENCE
ROBERT M. DENNEY, P.E. Date Engineer of Record 58593 HNTB CORPORATION 610 CRESCENT EXEC. CT. SUITE 400 LAKE MARY, FL 32746 (407) 805-0355 CERT OF AUTH NO 6500	ANNETTE K. BRENNAN, P.E. FDOT District Design Engineer Date 3/17/17	FHWA Transportation Engineer Date 7/25/17

ROBERT M. DENNEY LICENSE No. 58593 STATE OF FLORIDA PROFESSIONAL ENGINEER

mbacal 7/7/2017 2:38:30 PM \\LKMw00\pmwork3\Jobs\59219 - I4 SAMR\TECHPROD\Typical Section Package\TYPDRD01-SEG-1.DGN

PROJECT IDENTIFICATION

FINANCIAL PROJECT ID: 432100-1-22-01 COUNTY (SECTION): OSCEOLA (92130)

PROJECT DESCRIPTION: WIDENING SR 400 (I-4) FROM WEST OF CR 532 TO WEST OF SR 435 (KIRKMAN RD.) AND FROM 1 MILE EAST OF SR 434 TO 1/2 MILE EAST OF SR 472.

PROJECT CONTROLS (US 192/SR 530)

FUNCTIONAL CLASSIFICATION

( ) RURAL
(X) URBAN

( ) FREEWAY/EXPWY. ( ) MAJOR COLL.
(X) PRINCIPAL ART. ( ) MINOR COLL.
( ) MINOR ART. ( ) LOCAL

HIGHWAY SYSTEM

Yes	No	
(X)	( )	NATIONAL HIGHWAY SYSTEM
( )	(X)	FLORIDA INTRASTATE HIGHWAY SYSTEM
( )	(X)	STRATEGIC INTERMODAL SYSTEM
(X)	( )	STATE HIGHWAY SYSTEM
( )	(X)	OFF STATE HIGHWAY SYSTEM

ACCESS CLASSIFICATION

( ) 1 - FREEWAY
( ) 2 - RESTRICTIVE w/Service Roads
( ) 3 - RESTRICTIVE w/660 ft. Connection Spacing
( ) 4 - NON-RESTRICTIVE w/2640 ft. Signal Spacing
(X) 5 - RESTRICTIVE w/440 ft. Connection Spacing
( ) 6 - NON-RESTRICTIVE w/1320 ft. Signal Spacing
( ) 7 - BOTH MEDIAN TYPES

TRAFFIC

	YEAR	AADT
OPENING	2020	55,000
INTERIM	2030	64,000
DESIGN	2040	74,000

DESIGN SPEED 50 MPH
POSTED SPEED 50 MPH

DISTRIBUTION

K	7.4
D	53.66
T_{24}	3.9%

CRITERIA

(X) NEW CONSTRUCTION / RECONSTRUCTION
( ) RRR INTERSTATE / FREEWAY
( ) RRR NON-INTERSTATE / FREEWAY
( ) TDLC / NEW CONSTRUCTION / RECONSTRUCTION
( ) TDLC / RRR
( ) MANUAL OF UNIFORM MINIMUM STANDARDS (FLORIDA GREENBOOK) (OFF-STATE HIGHWAY SYSTEM ONLY)

DESIGN SPEED APPROVALS

A K Brennan — 3/17/17
DISTRICT DESIGN ENGINEER — DATE

James [illegible] — 4/10/17
DISTRICT TRAFFIC OPERATIONS ENGINEER — DATE

LIST ANY POTENTIAL EXCEPTIONS AND VARIATIONS RELATED TO TYPICAL SECTION ELEMENTS:

N/A

LIST MAJOR STRUCTURES LOCATION/DESCRIPTION - REQUIRING INDEPENDENT STRUCTURE DESIGN:

US 192 (920083, 920193, 920192, 920195, 920194)

LIST MAJOR UTILITIES WITHIN PROJECT CORRIDOR:
GAS (CENTRAL FLORIDA GAS)
WATER (OSCEOLA COUNTY UTILITIES)
COMMUNICATIONS (BRIGHTHOUSE NETWORKS, COMCAST, LEVEL 3, VERIZON)
WASTEWATER (OSCEOLA COUNTY UTILITIES)
ELECTRIC (DUKE ENERGY DISTRIBUTION, DUKE ENERGY TRANSMISSION)

LIST OTHER INFORMATION PERTINENT TO DESIGN OF PROJECT:

N/A

PROJECT IDENTIFICATION

FINANCIAL PROJECT ID 432100-1-22-01 FEDERAL AID PROJECT NO. N/A COUNTY NAME OSCEOLA

SECTION NO. 92130 ROAD DESIGNATION SR 400 (I-4) LIMITS/MILEPOST MP 0.000 - 7.885

PROJECT DESCRIPTION WIDENING SR 400 (I-4) FROM WEST OF CR 532 TO WEST OF SR 435 KIRKMAN ROAD AND FROM 1 MILE EAST OF SR 434 TO 1/2 MILE EAST OF SR 472.

PROPOSED STRUCTURE TYPICAL SECTION

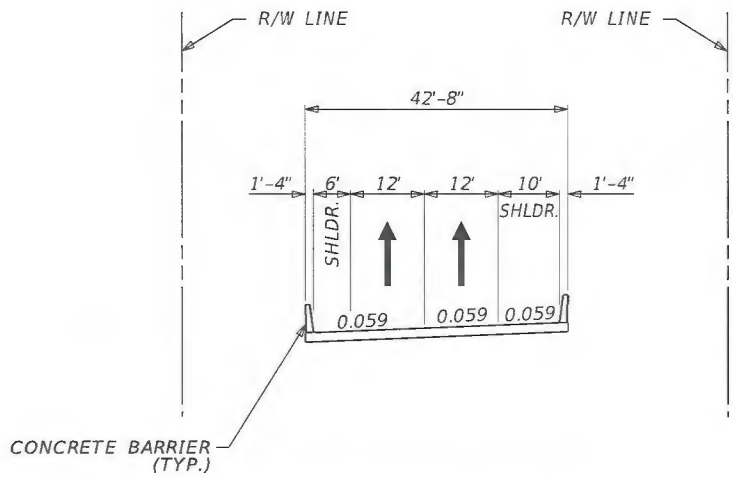

DESIGN SPEED = 50 MPH

US 192/SR 530 EASTBOUND RAMP BRIDGE SECTION

SHEET 1A-31

APPROVED BY	FDOT CONCURRENCE	FHWA CONCURRENCE
ROBERT M. DENNEY, P.E. Date Engineer Of Record 58593 HNTB CORPORATION 610 CRESCENT EXEC. CT. SUITE 400 LAKE MARY, FL 32746 (407) 805-0355 CERT OF AUTH NO 6500	ANNETTE K. BRENNAN, P.E. Date 3/17/17 FDOT District Design Engineer	FHWA Transportation Engineer Date 7/25/17

ROBERT M. DENNEY LICENSE No. 58593 STATE OF FLORIDA PROFESSIONAL ENGINEER

PROJECT IDENTIFICATION

FINANCIAL PROJECT ID 432100-1-22-01 FEDERAL AID PROJECT NO. N/A COUNTY NAME OSCEOLA

SECTION NO. 92130 ROAD DESIGNATION SR 400 (I-4) LIMITS/MILEPOST MP 0.000 - 7.885

PROJECT DESCRIPTION WIDENING SR 400 (I-4) FROM WEST OF CR 532 TO WEST OF SR 435 KIRKMAN ROAD AND FROM 1 MILE EAST OF SR 434 TO 1/2 MILE EAST OF SR 472.

PROPOSED ROADWAY TYPICAL SECTION

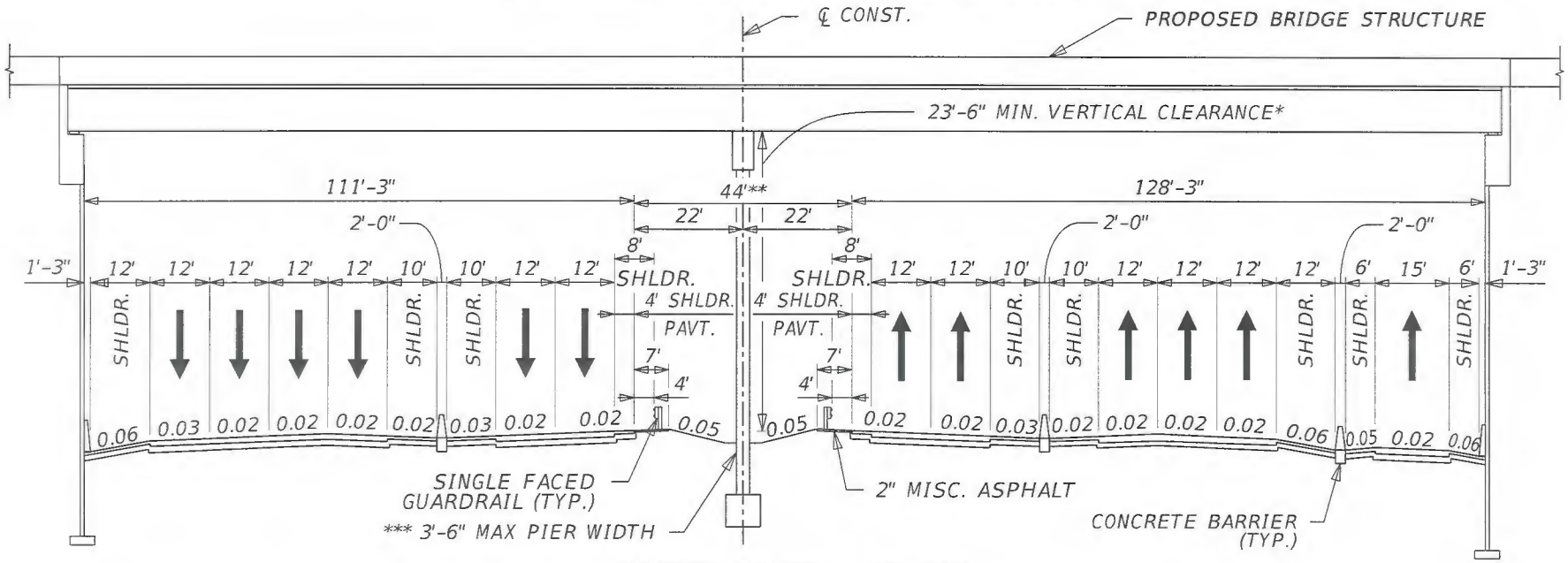

DESIGN SPEED = 70 MPH

SR 400 (I-4) UNDER US 192/SR 530 EASTBOUND RAMP

* VERTICAL CLEARANCE MEASURED FROM EXPRESS LANE INSIDE EDGE OF TRAVEL TO LOW MEMBER.

** 44' REQUIRED FOR FUTURE RAIL CORRIDOR. FUTURE RAIL CORRIDOR IS MEASURED FROM FACE OF FUTURE INSIDE BARRIER TO FACE OF FUTURE INSIDE BARRIER.

*** 3'-6" MAXIMUM PIER WIDTH ALLOWED.

SHEET 1A-32

ROBERT M. DENNEY LICENSE No. 58593 STATE OF FLORIDA PROFESSIONAL ENGINEER

APPROVED BY	FDOT CONCURRENCE	FHWA CONCURRENCE
ROBERT M. DENNEY, P.E. Date Engineer of Record 58593 HNTB CORPORATION 610 CRESCENT EXEC. CT. SUITE 400 LAKE MARY, FL 32746 (407) 805-0355 CERT OF AUTH NO 6500	ANNETTE K. BRENNAN, P.E. FDOT District Design Engineer 3/17/17 Date	FHWA Transportation Engineer 7/25/17 Date

PROJECT IDENTIFICATION

FINANCIAL PROJECT ID 432100-1-22-01 FEDERAL AID PROJECT NO. N/A COUNTY NAME OSCEOLA

SECTION NO. 92130 ROAD DESIGNATION SR 400 (I-4) LIMITS/MILEPOST MP 0.000 - 7.885

PROJECT DESCRIPTION WIDENING SR 400 (I-4) FROM WEST OF CR 532 TO WEST OF SR 435 KIRKMAN ROAD AND FROM 1 MILE EAST OF SR 434 TO 1/2 MILE EAST OF SR 472.

PROPOSED STRUCTURE TYPICAL SECTION

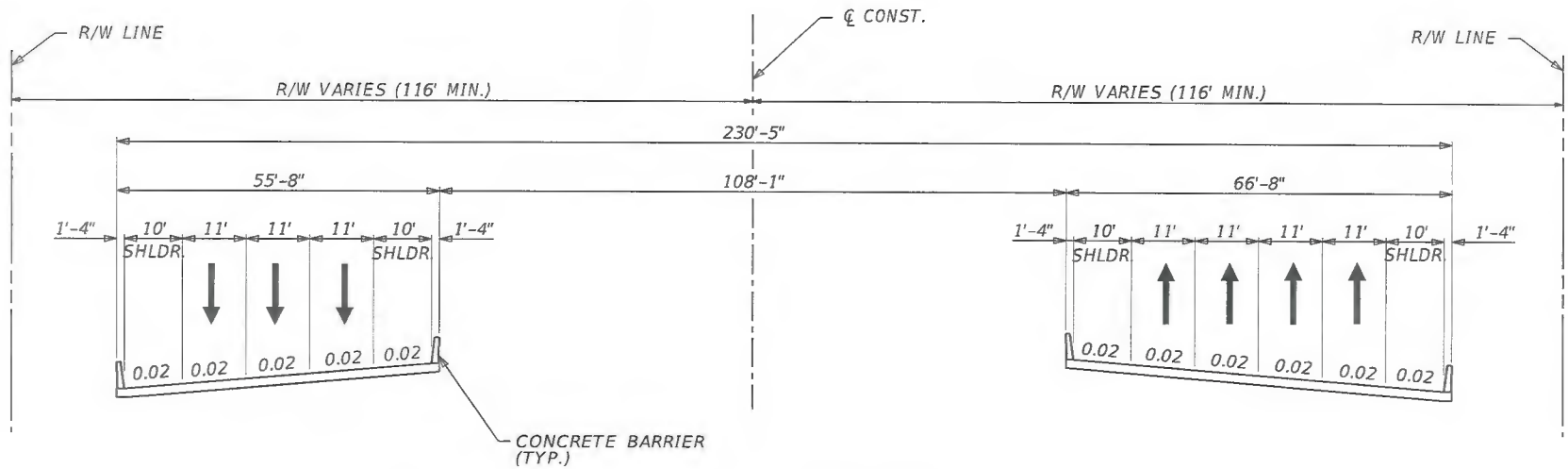

DESIGN SPEED = 50 MPH
US 192/SR 530 BRIDGE SECTION

SHEET 1A-33

APPROVED BY	FDOT CONCURRENCE	FHWA CONCURRENCE
ROBERT M. DENNEY, P.E. Engineer Of Record 58593 — Date 2/9/17 HNTB CORPORATION 610 CRESCENT EXEC. CT. SUITE 400 LAKE MARY, FL 32746 (407) 805-0355 CERT OF AUTH NO 6500	ANNETTE K. BRENNAN, P.E. FDOT District Design Engineer — Date 3/17/17	FHWA Transportation Engineer — Date 2/25/17

ROBERT M. DENNEY LICENSE No. 58593 STATE OF FLORIDA PROFESSIONAL ENGINEER

PROJECT IDENTIFICATION

FINANCIAL PROJECT ID 432100-1-22-01 FEDERAL AID PROJECT NO. N/A COUNTY NAME OSCEOLA

SECTION NO. 92130 ROAD DESIGNATION SR 400 (I-4) LIMITS/MILEPOST MP 0.000 - 7.885

PROJECT DESCRIPTION WIDENING SR 400 (I-4) FROM WEST OF CR 532 TO WEST OF SR 435 KIRKMAN ROAD AND FROM 1 MILE EAST OF SR 434 TO 1/2 MILE EAST OF SR 472.

PROPOSED ROADWAY TYPICAL SECTION

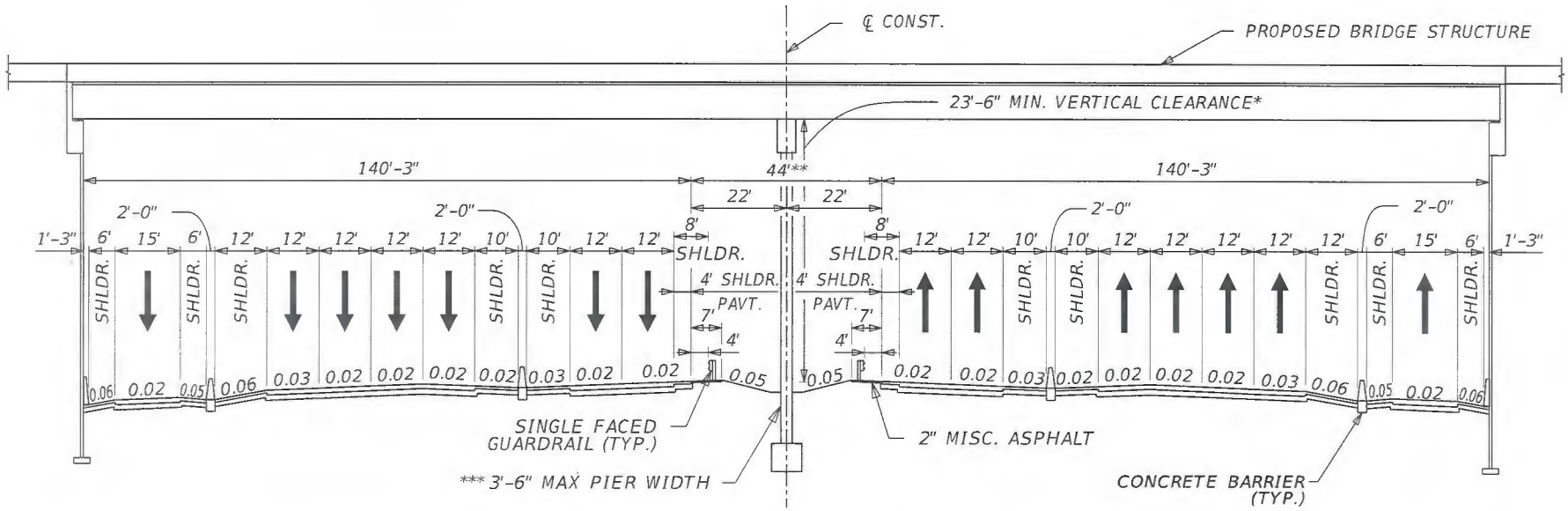

DESIGN SPEED = 70 MPH

SR 400 (I-4) UNDER US 192/SR 530

* VERTICAL CLEARANCE MEASURED FROM EXPRESS LANE INSIDE EDGE OF TRAVEL TO LOW MEMBER.

** 44' REQUIRED FOR FUTURE RAIL CORRIDOR. FUTURE RAIL CORRIDOR IS MEASURED FROM FACE OF FUTURE INSIDE BARRIER TO FACE OF FUTURE INSIDE BARRIER.

*** 3'-6" MAXIMUM PIER WIDTH ALLOWED.

SHEET 1A-34

APPROVED BY	FDOT CONCURRENCE	FHWA CONCURRENCE
ROBERT M. DENNEY, P.E. Date 2/9/17 Engineer Of Record 58593 HNTB CORPORATION 610 CRESCENT EXEC. CT. SUITE 400 LAKE MARY, FL 32746 (407) 805-0355 CERT OF AUTH NO 6500	ANNETTE K. BRENNAN, P.E. FDOT District Design Engineer Date 3/17/17	FHWA Transportation Engineer Date 7/25/17

ROBERT M. DENNEY LICENSE No. 58593 STATE OF FLORIDA PROFESSIONAL ENGINEER

mbaca 2/9/2017 2:38:33 PM \\LKMw00\pmwork3\Jobs\59219 - I4 SAMR\TECHPROD\Typical Section Package\TYPDRD01-SEG-1.DGN

PROJECT IDENTIFICATION

FINANCIAL PROJECT ID 432100-1-22-01 FEDERAL AID PROJECT NO. N/A COUNTY NAME OSCEOLA

SECTION NO. 92130 ROAD DESIGNATION SR 400 (I-4) LIMITS/MILEPOST MP 0.000 - 7.885

PROJECT DESCRIPTION WIDENING SR 400 (I-4) FROM WEST OF CR 532 TO WEST OF SR 435 KIRKMAN ROAD AND FROM 1 MILE EAST OF SR 434 TO 1/2 MILE EAST OF SR 472.

PROPOSED ROADWAY TYPICAL SECTION

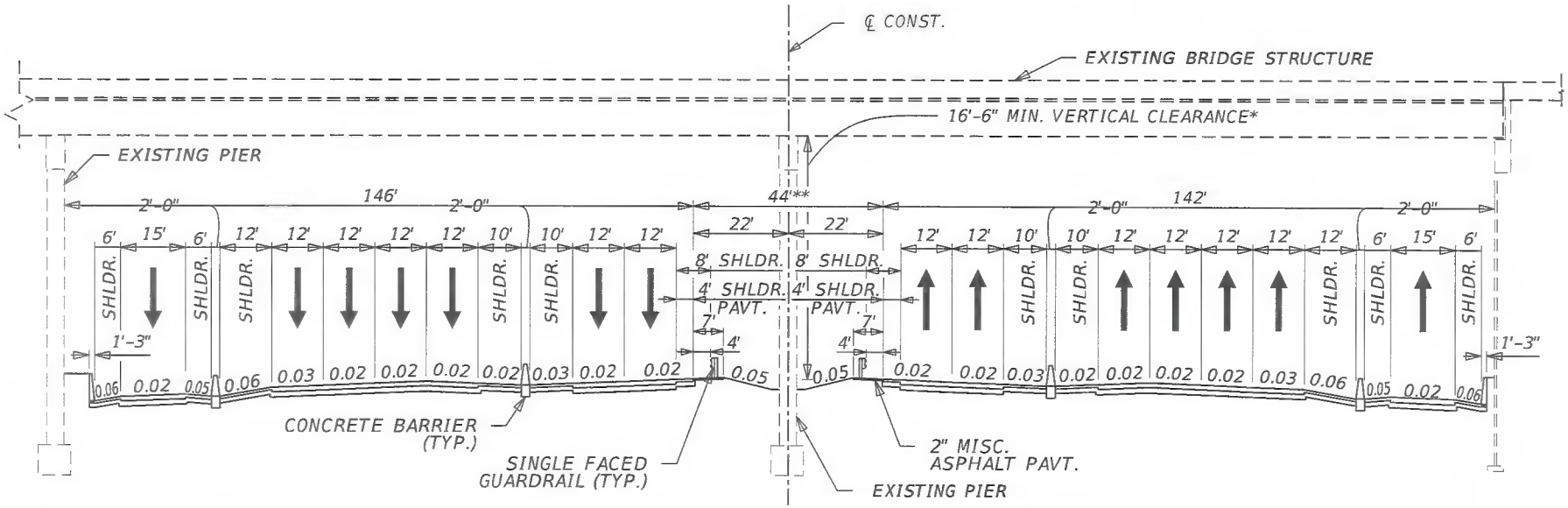

DESIGN SPEED = 70 MPH

SR 400 (I-4) UNDER US 192/SR 530 WESTBOUND RAMP TO WESTBOUND SR 400 (I-4)

* VERTICAL CLEARANCE MEASURED FROM EXPRESS LANE INSIDE EDGE OF TRAVEL TO LOW MEMBER.

** 44' REQUIRED FOR FUTURE RAIL CORRIDOR. FUTURE RAIL CORRIDOR IS MEASURED FROM FACE OF FUTURE INSIDE BARRIER TO FACE OF FUTURE INSIDE BARRIER.

SHEET 1A-35

APPROVED BY	FDOT CONCURRENCE	FHWA CONCURRENCE
ROBERT M. DENNEY, P.E. Engineer Of Record 58593 — Date 7/9/17 — HNTB CORPORATION, 610 CRESCENT EXEC. CT. SUITE 400, LAKE MARY, FL 32746, (407) 805-0355, CERT OF AUTH NO 6500	ANNETTE K. BRENNAN, P.E. FDOT District Design Engineer — Date 3/17/17	FHWA Transportation Engineer — Date 7/25/17

ROBERT M. DENNEY LICENSE No. 58593 STATE OF FLORIDA PROFESSIONAL ENGINEER

PROJECT IDENTIFICATION

FINANCIAL PROJECT ID 432100-1-22-01 FEDERAL AID PROJECT NO. N/A COUNTY NAME OSCEOLA

SECTION NO. 92130 ROAD DESIGNATION SR 400 (I-4) LIMITS/MILEPOST MP 0.000 - 7.885

PROJECT DESCRIPTION WIDENING SR 400 (I-4) FROM WEST OF CR 532 TO WEST OF SR 435 KIRKMAN ROAD AND FROM 1 MILE EAST OF SR 434 TO 1/2 MILE EAST OF SR 472.

PROPOSED STRUCTURE TYPICAL SECTION

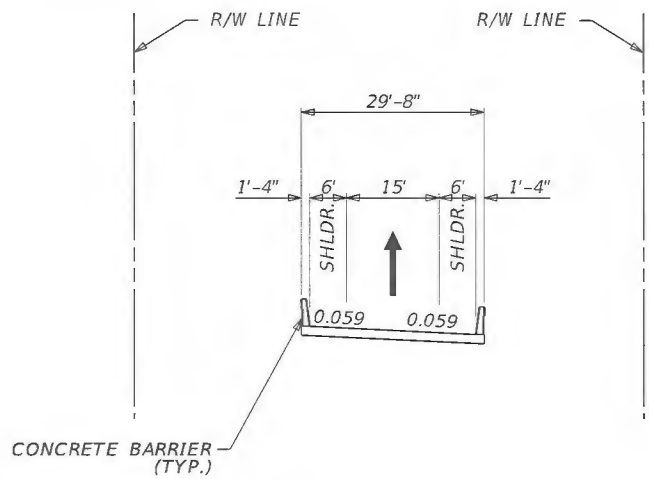

DESIGN SPEED = 50 MPH

SR US 192/SR 530 BRIDGE SECTION

EASTBOUND SR 400 (I-4) TO WESTBOUND SR US 192/SR 530 RAMP

SHEET 1A-36

APPROVED BY	FDOT CONCURRENCE	FHWA CONCURRENCE
ROBERT M. DENNEY, P.E. Date Engineer of Record 58593	ANNETTE K. BRENNAN, P.E. FDOT District Design Engineer 3/17/17 Date	FHWA Transportation Engineer 7/25/17 Date

HNTB CORPORATION
610 CRESCENT EXEC. CT.
SUITE 400
LAKE MARY, FL 32746
(407) 805-0355
CERT OF AUTH NO 6500

ROBERT M. DENNEY LICENSE No. 58593 STATE OF FLORIDA PROFESSIONAL ENGINEER

PROJECT IDENTIFICATION

FINANCIAL PROJECT ID 432100-1-22-01 FEDERAL AID PROJECT NO. N/A COUNTY NAME OSCEOLA

SECTION NO. 92130 ROAD DESIGNATION SR 400 (I-4) LIMITS/MILEPOST MP 0.000 - 7.885

PROJECT DESCRIPTION WIDENING SR 400 (I-4) FROM WEST OF CR 532 TO WEST OF SR 435 KIRKMAN ROAD AND FROM 1 MILE EAST OF SR 434 TO 1/2 MILE EAST OF SR 472.

PROPOSED ROADWAY TYPICAL SECTION

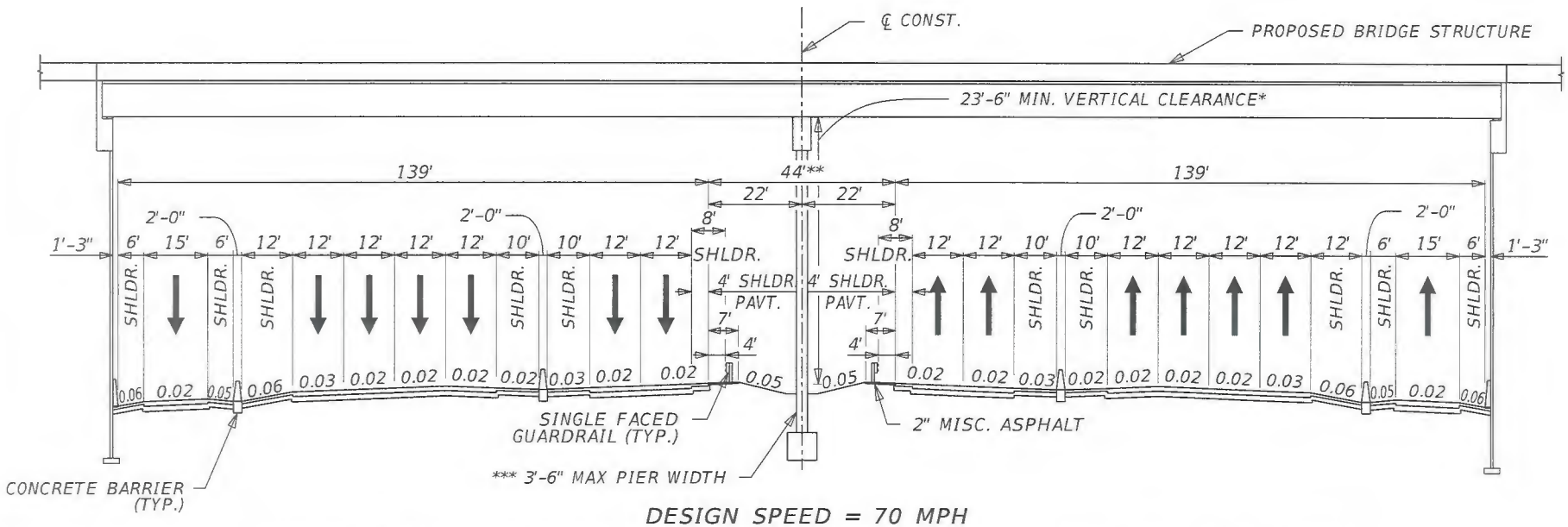

DESIGN SPEED = 70 MPH

SR 400 (I-4) UNDER EASTBOUND SR 400 (I-4) RAMP TO US 192/SR 530 WESTBOUND

* VERTICAL CLEARANCE MEASURED FROM EXPRESS LANE INSIDE EDGE OF TRAVEL TO LOW MEMBER.

** 44' REQUIRED FOR FUTURE RAIL CORRIDOR. FUTURE RAIL CORRIDOR IS MEASURED FROM FACE OF FUTURE INSIDE BARRIER TO FACE OF FUTURE INSIDE BARRIER.

*** 3'-6" MAXIMUM PIER WIDTH ALLOWED.

SHEET 1A-37

ROBERT M. DENNEY LICENSE No. 58593 STATE OF FLORIDA PROFESSIONAL ENGINEER

APPROVED BY	FDOT CONCURRENCE	FHWA CONCURRENCE
ROBERT M. DENNEY, P.E. Engineer Of Record 58593 — Date 7/19/17 HNTB CORPORATION 610 CRESCENT EXEC. CT. SUITE 400 LAKE MARY, FL 32746 (407) 805-0355 CERT OF AUTH NO 6500	ANNETTE K. BRENNAN, P.E. FDOT District Design Engineer Date 3/17/17	FHWA Transportation Engineer Date 7/25/17

PROJECT IDENTIFICATION

FINANCIAL PROJECT ID: 432100-1-22-01 COUNTY (SECTION): OSCEOLA (92130)

PROJECT DESCRIPTION: WIDENING SR 400 (I-4) FROM WEST OF CR 532 TO WEST OF SR 435 (KIRKMAN RD.) AND FROM 1 MILE EAST OF SR 434 TO 1/2 MILE EAST OF SR 472.

PROJECT CONTROLS (OSCEOLA PARKWAY)

FUNCTIONAL CLASSIFICATION

( ) RURAL
(X) URBAN

( ) FREEWAY/EXPWY. ( ) MAJOR COLL.
(X) PRINCIPAL ART. ( ) MINOR COLL.
( ) MINOR ART. ( ) LOCAL

HIGHWAY SYSTEM

Yes	No	
( )	(X)	NATIONAL HIGHWAY SYSTEM
( )	(X)	FLORIDA INTRASTATE HIGHWAY SYSTEM
( )	(X)	STRATEGIC INTERMODAL SYSTEM
( )	(X)	STATE HIGHWAY SYSTEM
(X)	( )	OFF STATE HIGHWAY SYSTEM

ACCESS CLASSIFICATION

(X) 1 - FREEWAY
( ) 2 - RESTRICTIVE w/Service Roads
( ) 3 - RESTRICTIVE w/660 ft. Connection Spacing
( ) 4 - NON-RESTRICTIVE w/2640 ft. Signal Spacing
( ) 5 - RESTRICTIVE w/440 ft. Connection Spacing
( ) 6 - NON-RESTRICTIVE w/1320 ft. Signal Spacing
( ) 7 - BOTH MEDIAN TYPES

TRAFFIC

	YEAR	AADT
OPENING	2020	53,000
INTERIM	2030	61,000
DESIGN	2040	69,000

DESIGN SPEED 45 MPH
POSTED SPEED 45 MPH

DISTRIBUTION
K 7.4
D 53.66
T_{24} 5.0%

CRITERIA

(X) NEW CONSTRUCTION / RECONSTRUCTION
( ) RRR INTERSTATE / FREEWAY
( ) RRR NON-INTERSTATE / FREEWAY
( ) TDLC / NEW CONSTRUCTION / RECONSTRUCTION
( ) TDLC / RRR
( ) MANUAL OF UNIFORM MINIMUM STANDARDS (FLORIDA GREENBOOK) (OFF-STATE HIGHWAY SYSTEM ONLY)

DESIGN SPEED APPROVALS

A K Brennan — 3/17/17
DISTRICT DESIGN ENGINEER — DATE

[illegible] — 4/10/17
DISTRICT TRAFFIC OPERATIONS ENGINEER — DATE

LIST ANY POTENTIAL EXCEPTIONS AND VARIATIONS RELATED TO TYPICAL SECTION ELEMENTS:

N/A

LIST MAJOR STRUCTURES LOCATION/DESCRIPTION - REQUIRING INDEPENDENT STRUCTURE DESIGN:

OSCEOLA PARKWAY (920180)

LIST MAJOR UTILITIES WITHIN PROJECT CORRIDOR:
GAS (CENTRAL FLORIDA GAS)
WATER (OSCEOLA COUNTY UTILITIES)
COMMUNICATIONS (BRIGHTHOUSE NETWORKS, COMCAST, LEVEL 3, VERIZON)
WASTEWATER (OSCEOLA COUNTY UTILITIES)
ELECTRIC (DUKE ENERGY DISTRIBUTION, DUKE ENERGY TRANSMISSION)

LIST OTHER INFORMATION PERTINENT TO DESIGN OF PROJECT:

N/A

PROJECT IDENTIFICATION

FINANCIAL PROJECT ID 432100-1-22-01 FEDERAL AID PROJECT NO. N/A COUNTY NAME OSCEOLA

SECTION NO. 92130 ROAD DESIGNATION SR 400 (I-4) LIMITS/MILEPOST MP 0.000 - 7.885

PROJECT DESCRIPTION WIDENING SR 400 (I-4) FROM WEST OF CR 532 TO WEST OF SR 435 KIRKMAN ROAD AND FROM 1 MILE EAST OF SR 434 TO 1/2 MILE EAST OF SR 472.

PROPOSED STRUCTURE TYPICAL SECTION

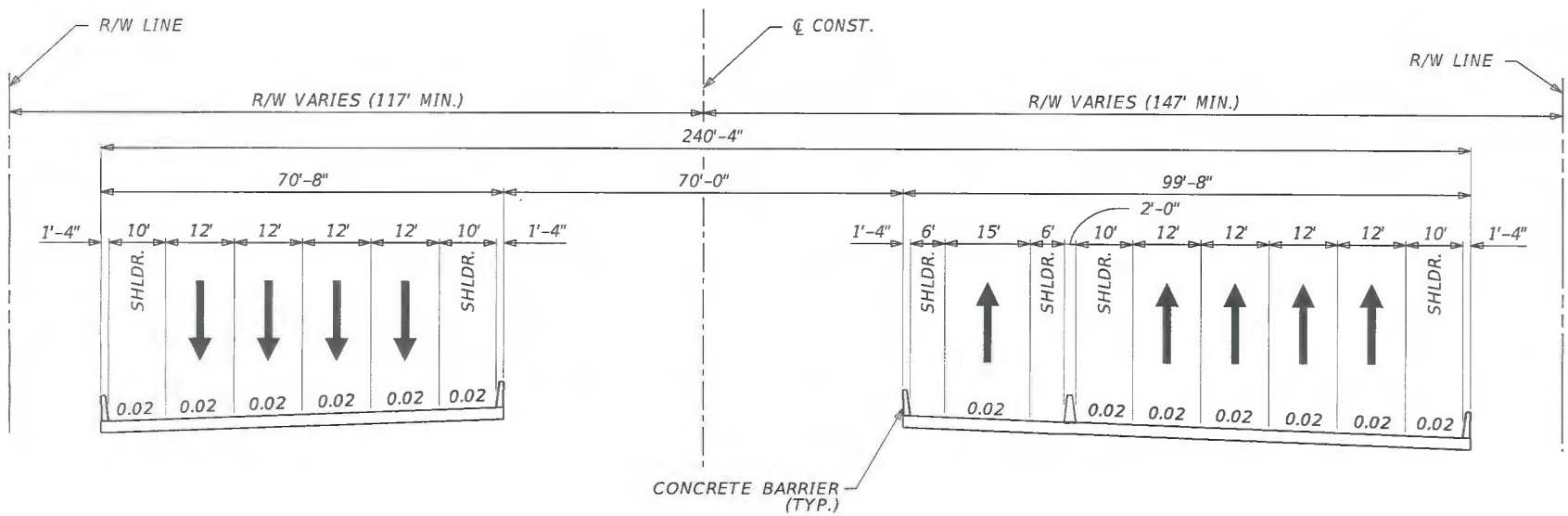

DESIGN SPEED = 45 MPH

OSCEOLA PARKWAY BRIDGE OVER SR 400 (I-4)

SHEET 1A-39

APPROVED BY	FDOT CONCURRENCE	FHWA CONCURRENCE	COUNTY CONCURRENCE
ROBERT M. DENNEY, P.E. Date Engineer Of Record 58593 3/17/17	HNTB CORPORATION 610 CRESCENT EXEC. CT. SUITE 400 LAKE MARY, FL 32746 (407) 805-0355 CERT OF AUTH NO 6500	ANNETTE K. BRENNAN, P.E. FDOT District Design Engineer 3/17/17 Date	FHWA Transportation Engineer 7/25/17 Date	County Engineer 5/11/17 Date

ROBERT M. DENNEY LICENSE No. 58593 STATE OF FLORIDA PROFESSIONAL ENGINEER

mbacal 2/9/2017 2:38:37 PM \\LKMw00\pmwork3\Jobs\59219 - I4 SAMR\TECHPROD\Typical Section Package\TYPDRD01-SEG-1.DGN

PROJECT IDENTIFICATION

FINANCIAL PROJECT ID 432100-1-22-01 FEDERAL AID PROJECT NO. N/A COUNTY NAME OSCEOLA

SECTION NO. 92130 ROAD DESIGNATION SR 400 (I-4) LIMITS/MILEPOST MP 0.000 - 7.885

PROJECT DESCRIPTION WIDENING SR 400 (I-4) FROM WEST OF CR 532 TO WEST OF SR 435 KIRKMAN ROAD AND FROM 1 MILE EAST OF SR 434 TO 1/2 MILE EAST OF SR 472.

PROPOSED ROADWAY TYPICAL SECTION

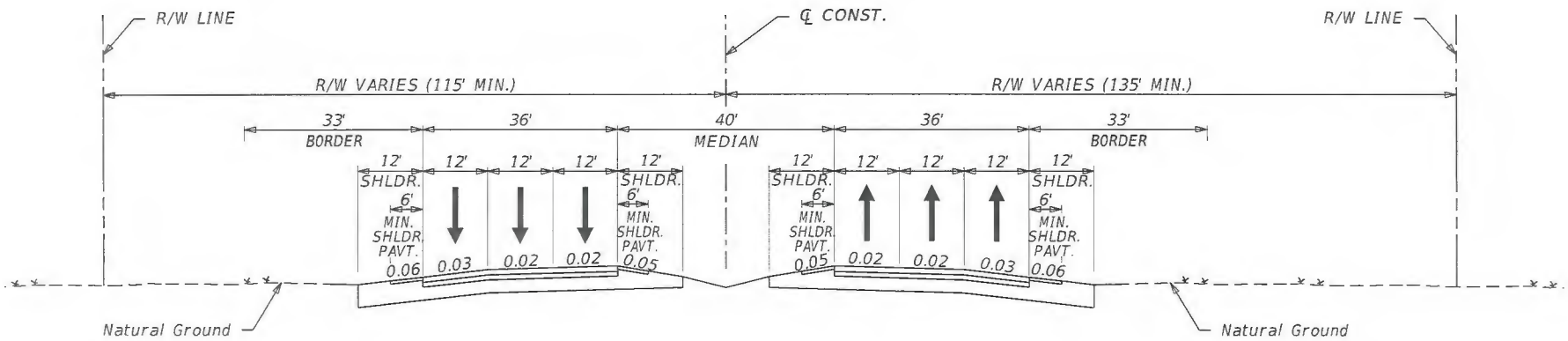

DESIGN SPEED = 45 MPH

OSCEOLA PARKWAY ROADWAY SECTION (WEST OF SR 400)

SHEET 1A-40

APPROVED BY	FDOT CONCURRENCE	FHWA CONCURRENCE	COUNTY CONCURRENCE
STATE OF FLORIDA ROBERT M. DENNEY, P.E. Engineer Of Record 58593 — Date 7/25/17	HNTB CORPORATION 610 CRESCENT EXEC. CT. SUITE 400 LAKE MARY, FL 32746 (407) 805-0355 CERT OF AUTH NO 6500	ANNETTE K. BRENNAN, P.E. FDOT District Design Engineer — Date 3/17/17	FHWA Transportation Engineer — Date 7/25/17	County Engineer — Date 5/11/17

ROBERT M. DENNEY LICENSE No. 58593 STATE OF FLORIDA PROFESSIONAL ENGINEER

PROJECT IDENTIFICATION

FINANCIAL PROJECT ID 432100-1-22-01 FEDERAL AID PROJECT NO. N/A COUNTY NAME OSCEOLA

SECTION NO. 92130 ROAD DESIGNATION SR 400 (I-4) LIMITS/MILEPOST MP 0.000 - 7.885

PROJECT DESCRIPTION WIDENING SR 400 (I-4) FROM WEST OF CR 532 TO WEST OF SR 435 KIRKMAN ROAD AND FROM 1 MILE EAST OF SR 434 TO 1/2 MILE EAST OF SR 472.

PROPOSED ROADWAY TYPICAL SECTION

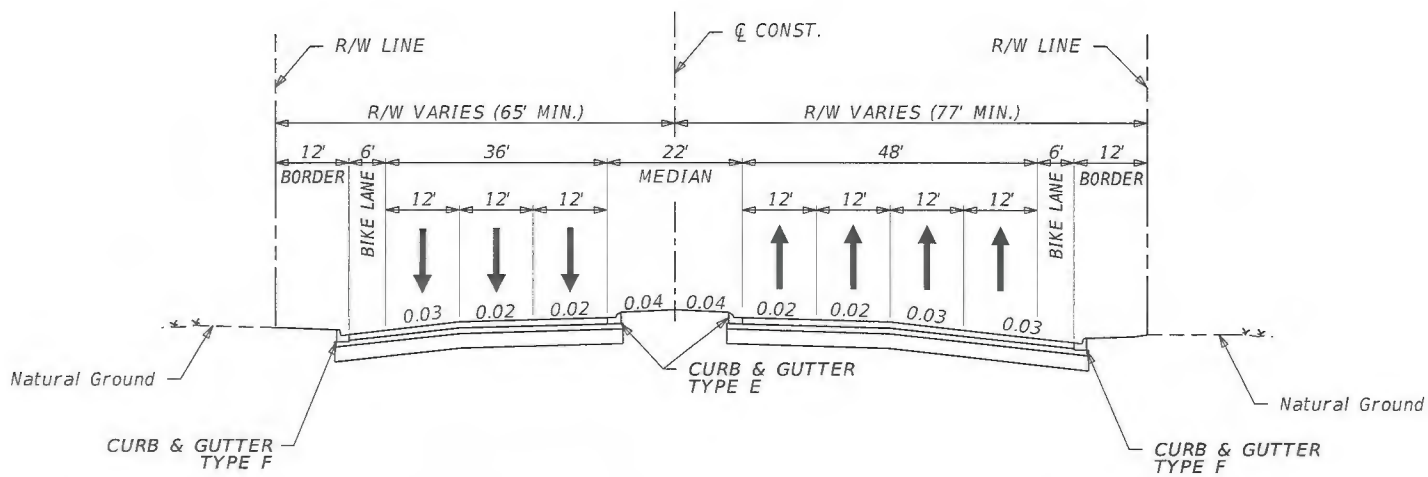

DESIGN SPEED = 45 MPH

OSCEOLA PARKWAY ROADWAY SECTION (EAST OF SR 400)

SHEET 1A-41

APPROVED BY	FDOT CONCURRENCE	FHWA CONCURRENCE	COUNTY CONCURRENCE
STATE OF FLORIDA ROBERT M. DENNEY, P.E. Date Engineer Of Record 58593	ANNETTE K. BRENNAN, P.E. FDOT District Design Engineer 3/17/17 Date	FHWA Transportation Engineer 7/25/17 Date	County Engineer 5/11/17 Date
HNTB CORPORATION 610 CRESCENT EXEC. CT. SUITE 400 LAKE MARY, FL 32746 (407) 805-0355 CERT OF AUTH NO 6500			

ROBERT M. DENNEY LICENSE No. 58593 PROFESSIONAL ENGINEER

mbaeal 2/9/2017 2:38:38 PM \\LKMw00\pmwork3\Jobs\59219 - I4 SAMR\TECHPROD\Typical Section Package\TYPDRD01-SEG-1.DGN

PROJECT IDENTIFICATION

FINANCIAL PROJECT ID 432100-1-22-01 FEDERAL AID PROJECT NO. N/A COUNTY NAME OSCEOLA

SECTION NO. 92130 ROAD DESIGNATION SR 400 (I-4) LIMITS/MILEPOST MP 0.000 - 7.885

PROJECT DESCRIPTION WIDENING SR 400 (I-4) FROM WEST OF CR 532 TO WEST OF SR 435 KIRKMAN ROAD AND FROM 1 MILE EAST OF SR 434 TO 1/2 MILE EAST OF SR 472.

PROPOSED ROADWAY TYPICAL SECTION

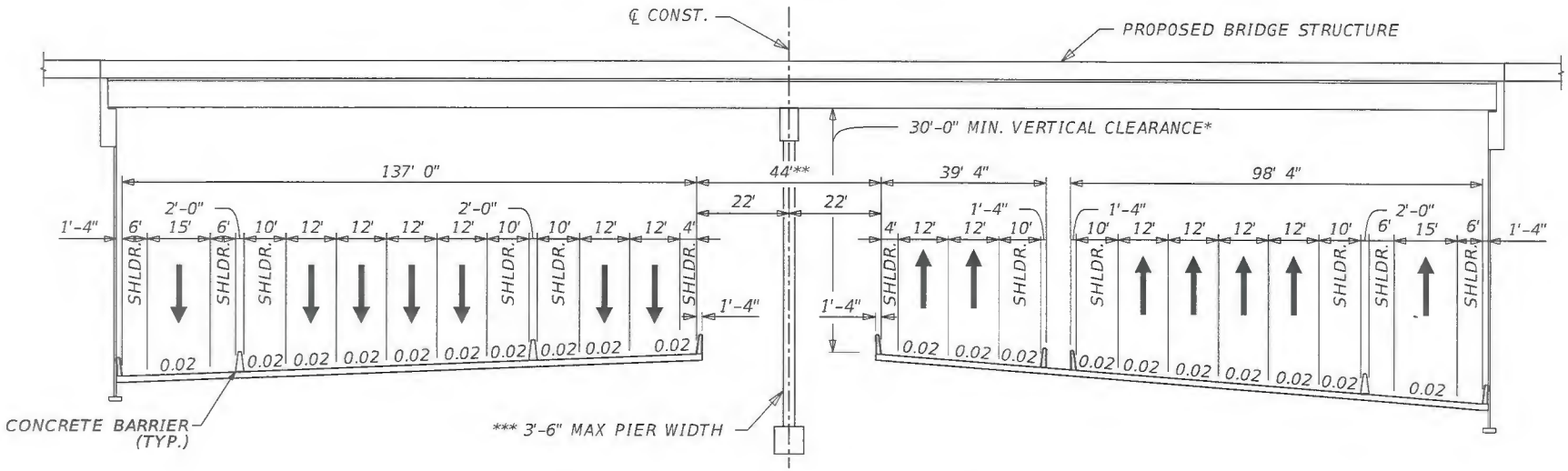

DESIGN SPEED = 70 MPH

SR 400 (I-4) UNDER OSCEOLA PARKWAY

* VERTICAL CLEARANCE MEASURED FROM EXPRESS LANE INSIDE EDGE OF TRAVEL TO LOW MEMBER (SPECIAL VERTICAL CLEARANCE REQUIRED FOR THE CONSTRUCTION OF THE I-4 BRIDGES UNDER OSCEOLA PARKWAY).

** 44' REQUIRED FOR FUTURE RAIL CORRIDOR. FUTURE RAIL CORRIDOR IS MEASURED FROM FACE OF FUTURE INSIDE BARRIER TO FACE OF FUTURE INSIDE BARRIER.

*** 3'-6" MAXIMUM PIER WIDTH ALLOWED.

SHEET 1A-42

APPROVED BY	FDOT CONCURRENCE	FHWA CONCURRENCE
ROBERT M. DENNEY, P.E. Date Engineer of Record 58593 HNTB CORPORATION 610 CRESCENT EXEC. CT. SUITE 400 LAKE MARY, FL 32746 (407) 805-0355 CERT OF AUTH NO 6500	ANNETTE K. BRENNAN, P.E. FDOT District Design Engineer 3/17/17 Date	FHWA Transportation Engineer 7/25/17 Date

ROBERT M. DENNEY LICENSE No. 58593 STATE OF FLORIDA PROFESSIONAL ENGINEER

I-4 Beyond the Ultimate

Seminole County Typical Section Package Index

PD&E FPID: 432100-1 (Segment 3)
Design FPID: 242592-4

I-4 Mainline

3-1 Key Sheet
3-2 I-4 Project Controls
3-3 I-4 Typical Section Without Transit Corridor & 3 General Use Lanes
3-4 I-4 Typical Section Without Transit Corridor & 4 General Use Lanes
3-5 I-4 Bridge Over Wekiva Parkway
3-6 I-4 Bridge Over SR 46 (Widen)
3-7 I-4 Bridge Over CR 431 (Orange Boulevard) And Sunrail Corridor (Widen)

Ramps

3-8 One Lane Ramp
3-9 Two Lane Ramp
3-10 Three Lane Ramp
3-11 One Lane Bridge Ramp
3-12 Two Lane Bridge Ramp
3-13 Three Lane Bridge Ramp

EE Williamson Road

3-14 EE Williamson Road Project Controls
3-15 EE Williamson Road Bridge Section (Replace)
3-16 EE Williamson Road Roadway Section
3-17 I-4 Under EE Williamson Road

Lake Mary Boulevard

3-18 Lake Mary Boulevard Project Controls
3-19 Lake Mary Boulevard Bridge Section (Replace)
3-20 Lake Mary Boulevard Roadway Section
3-21 I-4 Under Lake Mary Boulevard

Lake Emma Road

3-22 Lake Emma Road Project Controls
3-23 Lake Emma Road Roadway Section

Rinehart Road

3-24 Rinehart Road Project Controls
3-25 Rinehart Road Roadway Section

2017 JUN 8 AM 8:31

I-4 Beyond the Ultimate

Seminole County Typical Section Package Index

PD&E FPID: 432100-1 (Segment 3)
Design FPID: 242592-4

Cross Seminole Trail

3-26 I-4 Under Cross Seminole Trail

CR 46A

3-27 CR 46A Project Controls
3-28 CR 46A Bridge Section (Replace)
3-29 CR 46A Roadway Section
3-30 I-4 Under CR 46A

SR 46

3-31 SR 46 Project Controls
3-32 SR 46 under I-4

CR 431 (Orange Blvd)

3-33 CR 431 (Orange Blvd) Roadway Section

US 17/92

3-34 US 17/92 Project Controls
3-35 US 17/92 Bridge Section (New Bridge)
3-36 US 17/92 (CR 15, Monroe Rd.) Roadway Section
3-37 US 17/92 Bridge Section (Tie-To Existing Bridge Over St. Johns River)
3-38 I-4 Under US 17/92
3-39 Old US 17/92 Roadway Section Under I-4

STATE OF FLORIDA

DEPARTMENT OF TRANSPORTATION

FINANCIAL PROJECT ID 432100-1-22-01
(FEDERAL FUNDS)

SEMINOLE COUNTY (77160)

STATE ROAD NO. 400 (I-4)
I-4 BEYOND THE ULTIMATE
TYPICAL SECTION PACKAGE

N

0 3 6
Miles

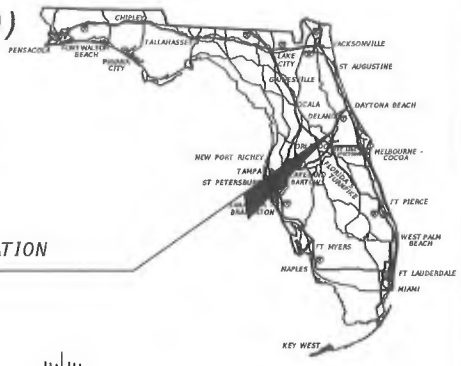

PROJECT LOCATION

END SEGMENT 3
℄ EXIST. SR 400
STA. 2583+00.00
MP 0.086 (VOLUSIA CO.)

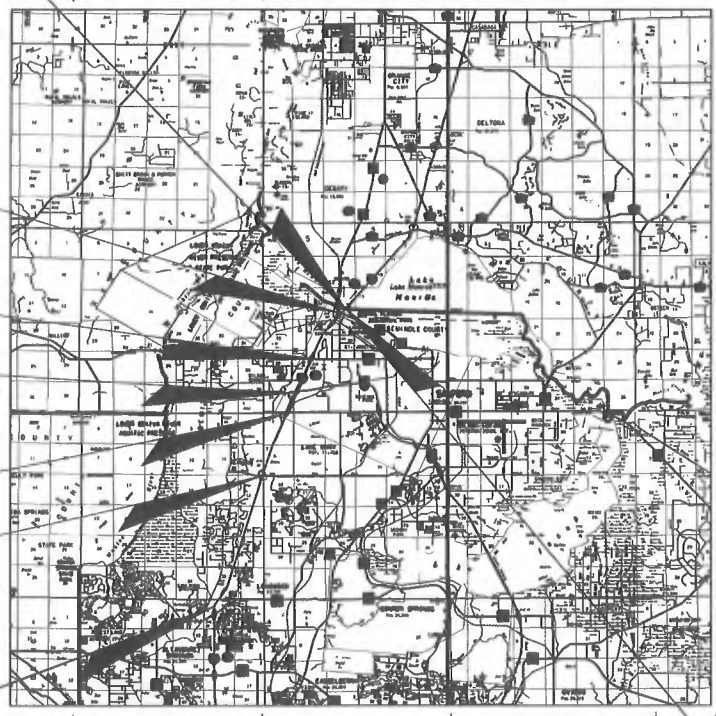

BEGIN SEGMENT 3
℄ EXIST. SR 400
STA. 2043+71.32
MP 4.050 (SEMINOLE CO.)

SEMINOLE / VOLUSIA CO. DIVIDE
MP 14.135 / 0.000

PROJECT LENGTH IS BASED ON ℄ OF CONSTRUCTION

LENGTH OF PROJECT		
	LINEAR FEET	MILES
ROADWAY	52600.70	9.962
BRIDGES	1327.98	0.252
NET LENGTH OF PROJECT	53928.68	10.214
EXCEPTIONS	--	--
GROSS LENGTH OF PROJECT	53928.68	10.214

FDOT PROJECT MANAGER: BEATA STYŚ-PALASZ, PE

SHEET 3-1

PROJECT IDENTIFICATION

FINANCIAL PROJECT ID: 432100-1-22-01 COUNTY (SECTION): SEMINOLE (77160)

PROJECT DESCRIPTION: WIDENING SR 400 (I-4) FROM WEST OF CR 532 TO WEST OF SR 435 (KIRKMAN RD.) AND FROM 1 MILE EAST OF SR 434 TO 1/2 MILE EAST OF SR 472.

PROJECT CONTROLS (SR 400/I-4)

FUNCTIONAL CLASSIFICATION

( ) RURAL
(X) URBAN

( ) FREEWAY/EXPWY. ( ) MAJOR COLL.
(X) PRINCIPAL ART. ( ) MINOR COLL.
( ) MINOR ART. ( ) LOCAL

HIGHWAY SYSTEM

Yes	No	
(X)	( )	NATIONAL HIGHWAY SYSTEM
( )	(X)	FLORIDA INTRASTATE HIGHWAY SYSTEM
(X)	( )	STRATEGIC INTERMODAL SYSTEM
(X)	( )	STATE HIGHWAY SYSTEM
( )	(X)	OFF STATE HIGHWAY SYSTEM

ACCESS CLASSIFICATION

(X) 1 - FREEWAY
( ) 2 - RESTRICTIVE w/Service Roads
( ) 3 - RESTRICTIVE w/660 ft. Connection Spacing
( ) 4 - NON-RESTRICTIVE w/2640 ft. Signal Spacing
( ) 5 - RESTRICTIVE w/440 ft. Connection Spacing
( ) 6 - NON-RESTRICTIVE w/1320 ft. Signal Spacing
( ) 7 - BOTH MEDIAN TYPES

TRAFFIC

	YEAR	AADT
OPENING	2020	159,000
INTERIM	2030	183,000
DESIGN	2040	207,000

DESIGN SPEED 70 MPH
POSTED SPEED 70 MPH

DISTRIBUTION
K 9.0
D 54.30
T_{24} 9.0%

CRITERIA

(X) NEW CONSTRUCTION / RECONSTRUCTION
( ) RRR INTERSTATE / FREEWAY
( ) RRR NON-INTERSTATE / FREEWAY
( ) TDLC / NEW CONSTRUCTION / RECONSTRUCTION
( ) TDLC / RRR
( ) MANUAL OF UNIFORM MINIMUM STANDARDS (FLORIDA GREENBOOK) (OFF-STATE HIGHWAY SYSTEM ONLY)

DESIGN SPEED APPROVALS

AK Brennan — 3/17/17
DISTRICT DESIGN ENGINEER — DATE

4/10/17
DISTRICT TRAFFIC OPERATIONS ENGINEER — DATE

LIST ANY POTENTIAL EXCEPTIONS AND VARIATIONS RELATED TO TYPICAL SECTION ELEMENTS:

BORDER WIDTH (VARIATION) - FOR THE BORDER WIDTHS LESS THAN 94-FT (94-FT REQUIRED)
SHOULDER WIDTH (VARIATION) - FOR THE 10-FT MEDIAN GUL SHOULDER (12-FT REQUIRED)
SHOULDER WIDTH (VARIATION) - FOR THE 4-FT MEDIAN EXPRESS LANE SHOULDER (6-FT REQUIRED)

LIST MAJOR STRUCTURES LOCATION/DESCRIPTION - REQUIRING INDEPENDENT STRUCTURE DESIGN:

EE WILLIAMSON RD.	(770018)
PEDESTRIAN BRIDGE	(774051)
LAKE MARY BLVD.	(770040, 770039)
PEDESTRIAN BRIDGE	(774049)
CR 46A	(770077)
SR 417	(770008, 770910)
SR 46	(770084, 770085)
OUTFALL DITCH	(770029)
ORANGE BLVD & CSX RR	(770086, 770087)
US 17-92	(PROPOSED)

LIST MAJOR UTILITIES WITHIN PROJECT CORRIDOR:

GAS (CENTRAL FLORIDA GAS)
WATER (SEMINOLE COUNTY UTILITIES, VOLUSIA COUNTY UTILITIES)
COMMUNICATIONS (BRIGHTHOUSE NETWORKS, COMCAST, LEVEL 3, VERIZON)
WASTEWATER (SEMINOLE COUNTY UTILITIES, VOLUSIA COUNTY UTILITIES)
ELECTRIC (DUKE ENERGY DISTRIBUTION, DUKE ENERGY TRANSMISSION)

LIST OTHER INFORMATION PERTINENT TO DESIGN OF PROJECT:

N/A

PROJECT IDENTIFICATION

FINANCIAL PROJECT ID 432100-1-22-01 FEDERAL AID PROJECT NO. N/A COUNTY NAME SEMINOLE

SECTION NO. 77160 ROAD DESIGNATION SR 400 (I-4) LIMITS/MILEPOST MP 4.050 - 14.135

PROJECT DESCRIPTION WIDENING SR 400 (I-4) FROM WEST OF CR 532 TO WEST OF SR 435 KIRKMAN ROAD AND FROM 1 MILE EAST OF SR 434 TO 1/2 MILE EAST OF SR 472.

PROPOSED ROADWAY TYPICAL SECTION

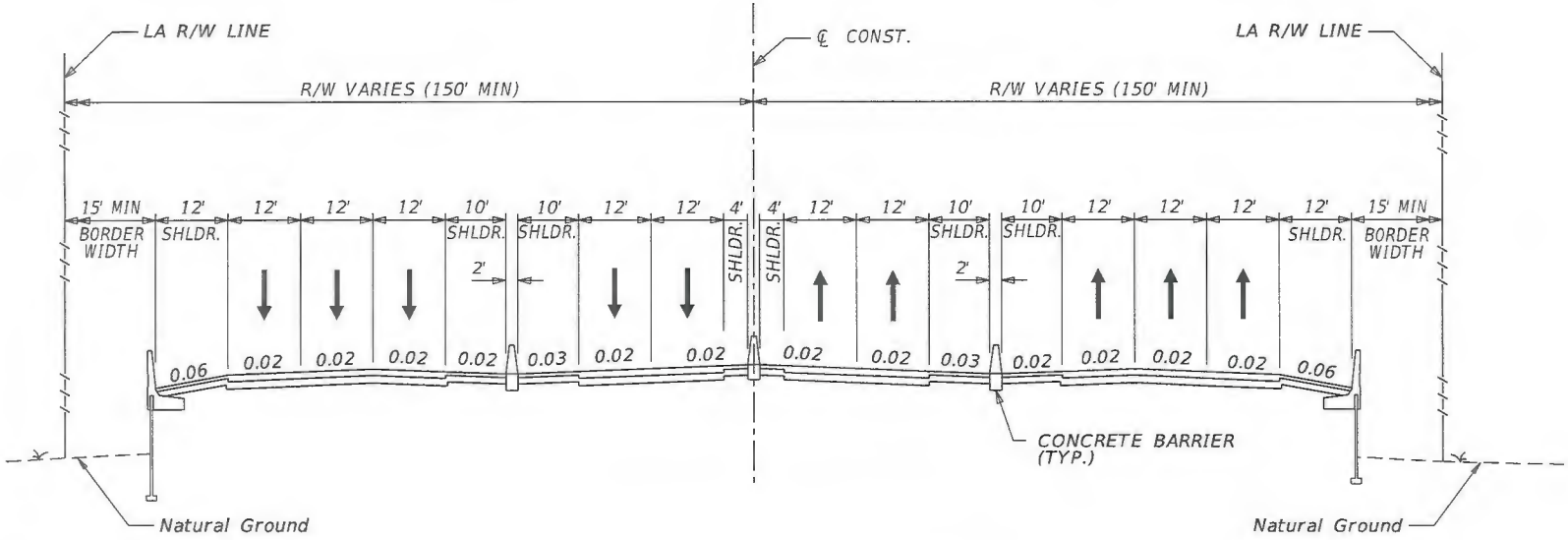

DESIGN SPEED = 70 MPH
SR 400 (I-4) WITHOUT TRANSIT CORRIDOR
STA 2244+00.00 TO 2578+48.33

SHEET 3-3

ROBERT M. DENNEY LICENSE No. 58593 STATE OF FLORIDA PROFESSIONAL ENGINEER

APPROVED BY	FDOT CONCURRENCE	FHWA CONCURRENCE
ROBERT M. DENNEY, P.E. Engineer Of Record 58593 — Date 7/20/17	ANNETTE K. BRENNAN, P.E. FDOT District Design Engineer — Date 3/17/17	FHWA Transportation Engineer — Date 7/20/17

HNTB CORPORATION
610 CRESCENT EXEC. CT.
SUITE 400
LAKE MARY, FL 32746
(407) 805-0355
CERT OF AUTH NO 6500

mbacal 7/20/2017 2:39:33 PM \\LKMw00\pmwork3\Jobs\59219 - I4 SAMR\TECHPROD\Typical Section Package\TYPDRD01-I-4 TYPICALS.DGN

PROJECT IDENTIFICATION

FINANCIAL PROJECT ID 432100-1-22-01 FEDERAL AID PROJECT NO. N/A COUNTY NAME SEMINOLE

SECTION NO. 77160 ROAD DESIGNATION SR 400 (I-4) LIMITS/MILEPOST MP 4.050 - 14.135

PROJECT DESCRIPTION WIDENING SR 400 (I-4) FROM WEST OF CR 532 TO WEST OF SR 435 KIRKMAN ROAD AND FROM 1 MILE EAST OF SR 434 TO 1/2 MILE EAST OF SR 472.

PROPOSED ROADWAY TYPICAL SECTION

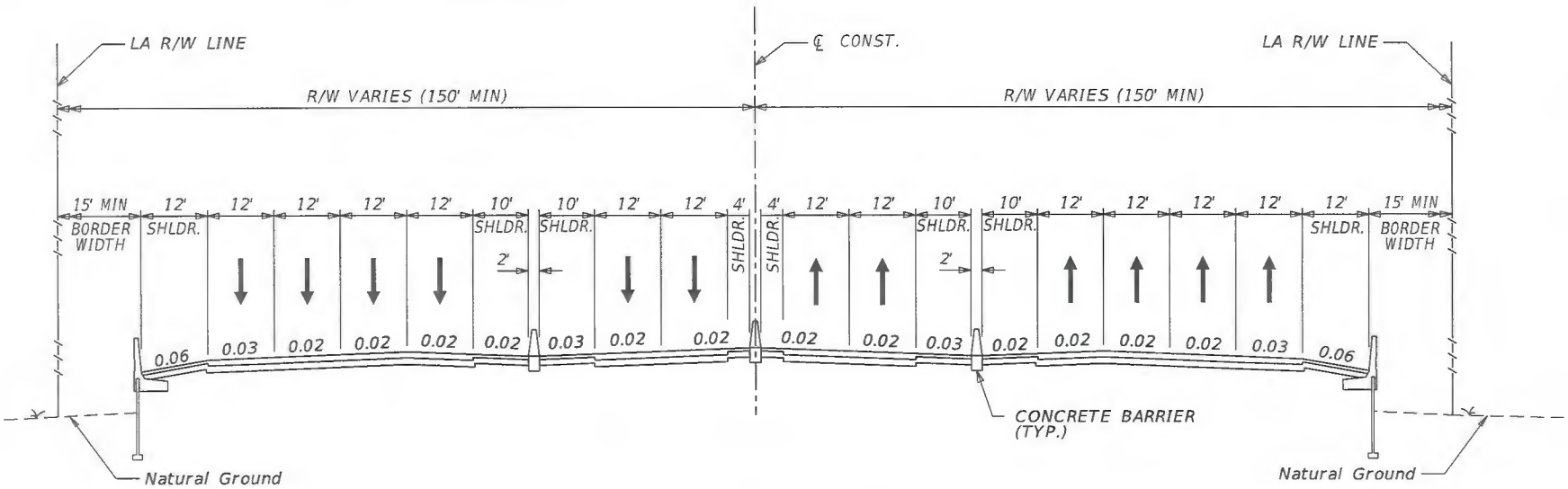

DESIGN SPEED = 70 MPH

SR 400 (I-4) WITHOUT TRANSIT CORRIDOR

STA 2079+37.95 TO 2244+00.00

SHEET 3-4

APPROVED BY	FDOT CONCURRENCE	FHWA CONCURRENCE
ROBERT M. DENNEY, P.E. Engineer of Record 58593 — Date 2/9/17	ANNETTE K. BRENNAN, P.E. FDOT District Design Engineer — Date 3/17/17	FHWA Transportation Engineer — Date 7/25/17
HNTB CORPORATION 610 CRESCENT EXEC. CT. SUITE 400 LAKE MARY, FL 32746 (407) 805-0355 CERT OF AUTH NO 6500		

ROBERT M. DENNEY LICENSE No. 58593 STATE OF FLORIDA PROFESSIONAL ENGINEER

mbacal 2/9/2017 2:39:34 PM \\LKMw00\pmwork3\Jobs\59219 - I4 SAMR\TECHPROD\Typical Section Package\TYPDRD01-I-4 TYPICALS.DGN

PROJECT IDENTIFICATION

FINANCIAL PROJECT ID 432100-1-22-01 FEDERAL AID PROJECT NO. N/A COUNTY NAME SEMINOLE

SECTION NO. 77160 ROAD DESIGNATION SR 400 (I-4) LIMITS/MILEPOST MP 4.050 - 14.135

PROJECT DESCRIPTION WIDENING SR 400 (I-4) FROM WEST OF CR 532 TO WEST OF SR 435 KIRKMAN ROAD AND FROM 1 MILE EAST OF SR 434 TO 1/2 MILE EAST OF SR 472.

PROPOSED STRUCTURE TYPICAL SECTION

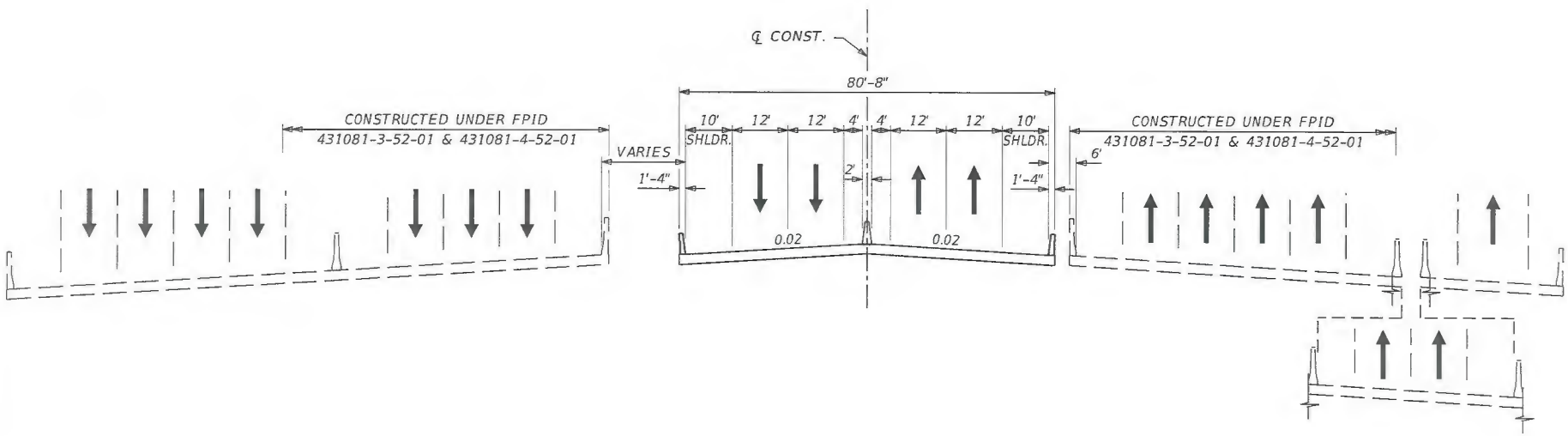

DESIGN SPEED = 70 MPH
SR 400 (I-4) BRIDGE OVER WEKIVA PARKWAY

SHEET 3-5

APPROVED BY	FDOT CONCURRENCE	FHWA CONCURRENCE
ROBERT M. DENNEY, P.E. Engineer of Record 58593 — Date 7/19/17 HNTB CORPORATION 610 CRESCENT EXEC. CT. SUITE 400 LAKE MARY, FL 32746 (407) 805-0355 CERT OF AUTH NO 6500	ANNETTE K. BRENNAN, P.E. FDOT District Design Engineer — Date 3/17/17	FHWA Transportation Engineer — Date 7/25/17

ROBERT M. DENNEY LICENSE No. 58593 STATE OF FLORIDA PROFESSIONAL ENGINEER

PROJECT IDENTIFICATION

FINANCIAL PROJECT ID 432100-1-22-01 FEDERAL AID PROJECT NO. N/A COUNTY NAME SEMINOLE

SECTION NO. 77160 ROAD DESIGNATION SR 400 (I-4) LIMITS/MILEPOST MP 4.050 - 14.135

PROJECT DESCRIPTION WIDENING SR 400 (I-4) FROM WEST OF CR 532 TO WEST OF SR 435 KIRKMAN ROAD AND FROM 1 MILE EAST OF SR 434 TO 1/2 MILE EAST OF SR 472.

PROPOSED STRUCTURE TYPICAL SECTION

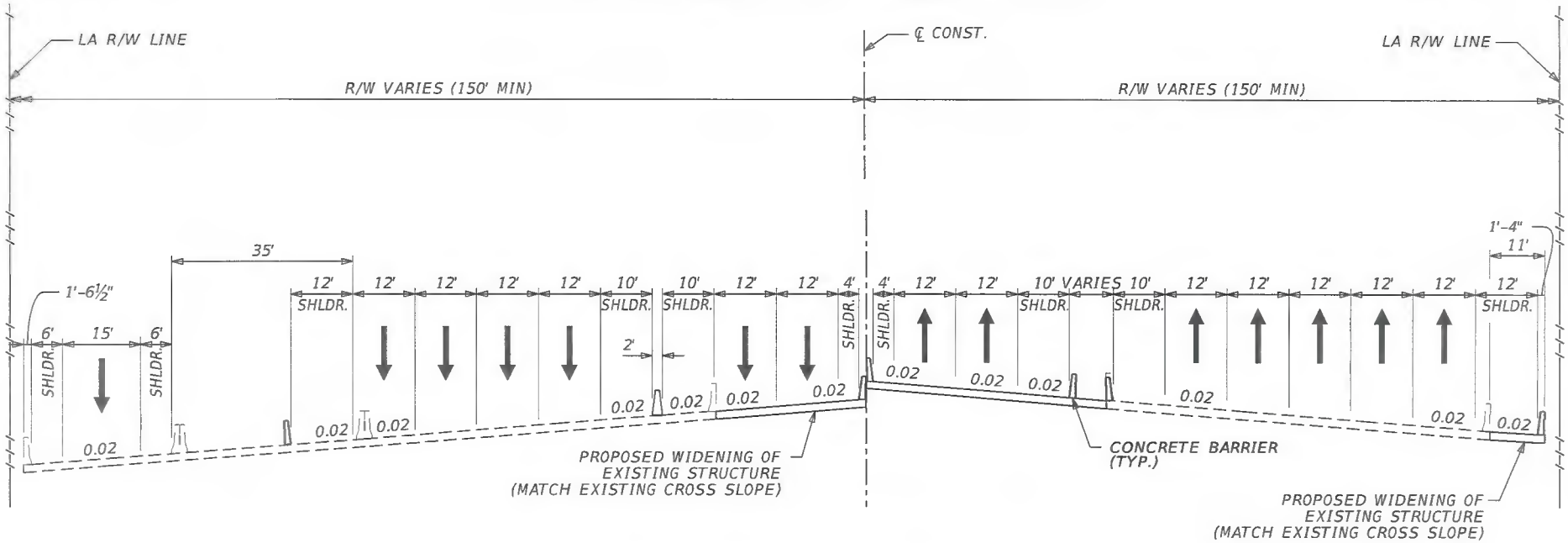

DESIGN SPEED = 70 MPH

SR 400 (I-4) BRIDGE OVER SR 46

SHEET 3-6

APPROVED BY	FDOT CONCURRENCE	FHWA CONCURRENCE
ROBERT M. DENNEY, P.E. Date Engineer of Record 58593 HNTB CORPORATION 610 CRESCENT EXEC. CT. SUITE 400 LAKE MARY, FL 32746 (407) 805-0355 CERT OF AUTH NO 6500	ANNETTE K. BRENNAN, P.E. FDOT District Design Engineer Date 3/17/17	FHWA Transportation Engineer Date 7/25/17

STATE OF FLORIDA ROBERT M. DENNEY No. 58593 PROFESSIONAL ENGINEER

mbacal 2/9/2017 2:39:34 PM \\LKMw00\pmwork3\Jobs\59219 - I4 SAMR\TECHPROD\Typical Section Package\TYPDRD01-I-4 TYPICALS.DGN

PROJECT IDENTIFICATION

FINANCIAL PROJECT ID 432100-1-22-01 FEDERAL AID PROJECT NO. N/A COUNTY NAME SEMINOLE

SECTION NO. 77160 ROAD DESIGNATION SR 400 (I-4) LIMITS/MILEPOST MP 4.050 - 14.135

PROJECT DESCRIPTION WIDENING SR 400 (I-4) FROM WEST OF CR 532 TO WEST OF SR 435 KIRKMAN ROAD AND FROM 1 MILE EAST OF SR 434 TO 1/2 MILE EAST OF SR 472.

PROPOSED STRUCTURE TYPICAL SECTION

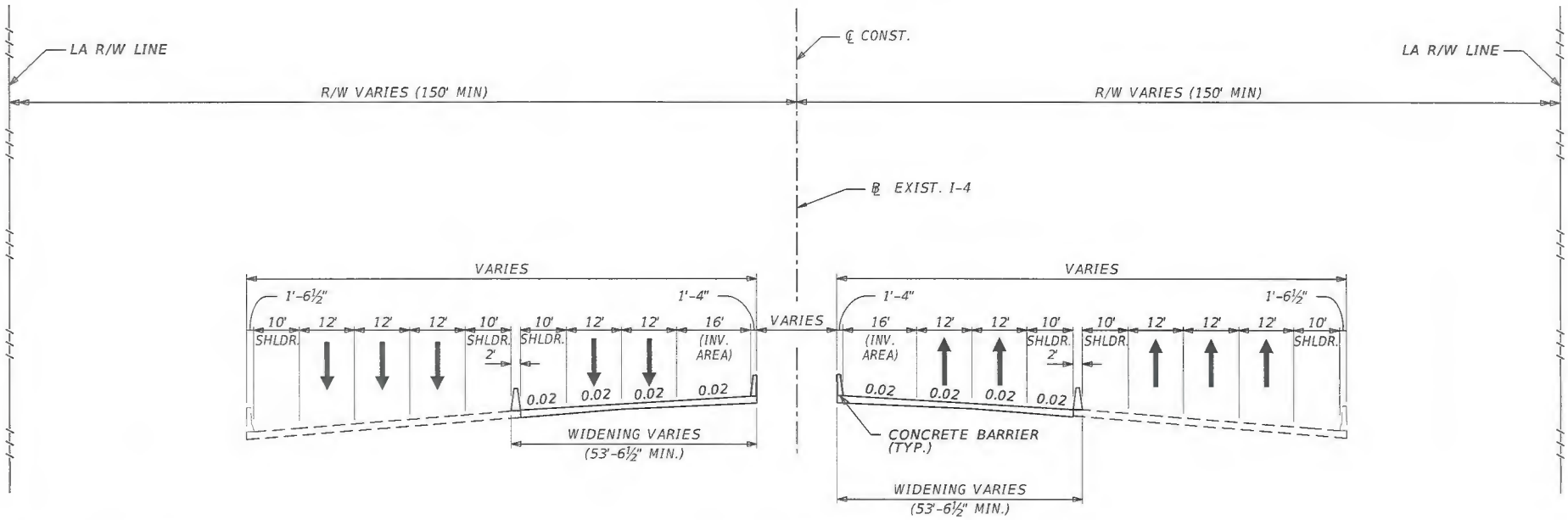

DESIGN SPEED = 70 MPH

SR 400 (I-4) BRIDGE OVER CR 431 (ORANGE BLVD.) AND SUNRAIL CORRIDOR

SHEET 3-7

APPROVED BY	FDOT CONCURRENCE	FHWA CONCURRENCE
ROBERT M. DENNEY, P.E. Date Engineer Of Record 58593 HNTB CORPORATION 610 CRESCENT EXEC. CT. SUITE 400 LAKE MARY, FL 32746 (407) 805-0355 CERT OF AUTH NO 6500	ANNETTE K. BRENNAN, P.E. FDOT District Design Engineer 3/17/17 Date	FHWA Transportation Engineer 7/25/17 Date

ROBERT M. DENNEY LICENSE No. 58593 STATE OF FLORIDA PROFESSIONAL ENGINEER

2/9/17

mbacal 2/9/2017 2:39:35 PM \\LKMw00\pmwork3\Jobs\59219 - I4 SAMR\TECHPROD\Typical Section Package\TYPDRD01-I-4 TYPICALS.DGN

PROJECT IDENTIFICATION

FINANCIAL PROJECT ID 432100-1-22-01 FEDERAL AID PROJECT NO. N/A COUNTY NAME SEMINOLE

SECTION NO. 77160 ROAD DESIGNATION SR 400 (I-4) LIMITS/MILEPOST MP 4.050 - 14.135

PROJECT DESCRIPTION WIDENING SR 400 (I-4) FROM WEST OF CR 532 TO WEST OF SR 435 KIRKMAN ROAD AND FROM 1 MILE EAST OF SR 434 TO 1/2 MILE EAST OF SR 472.

Ramp	Design Speed
SEGMENT 3	
LAKE EMMA RD TO I-4 EB GUL	30
LAKE EMMA RD TO I-4 WB GUL	50
LAKE MARY BLVD TO I-4 EB GUL	50
LAKE MARY BLVD TO I-4 WB GUL	50
CR 46A RAMP TO I-4 EB GUL	50
I-4 EB GUL RAMP TO SR 417 GUL	50
I-4 EB GUL RAMP TO SR 417 SB	50
I-4 EB GUL RAMP TO SR 417 SB	30
I-4 WB GUL RAMP TO SR 417 SB	30
I-4 EB EXPRESS LANES RAMP TO SR 417 GUL	50
I-4 WB EXPRESS LANES RAMP TO SR 417 GUL	50
SR 417 TO I-4 WB GUL	30
SR 429 NB RAMP TO I-4 EB	50
I-4 EB GUL RAMP TO SR 429 SB	30
I-4 WB EXPRESS LANES RAMP TO SR 429 SB	50
I-4 WB GUL RAMP TO SR 429 SB	50
SR 46 EB RAMP TO I-4 EB GUL	50
SR 46 EB RAMP TO I-4 WB GUL	30
I-4 WB GUL RAMP TO US 17/92 GUL	50

PROPOSED ROADWAY TYPICAL SECTION

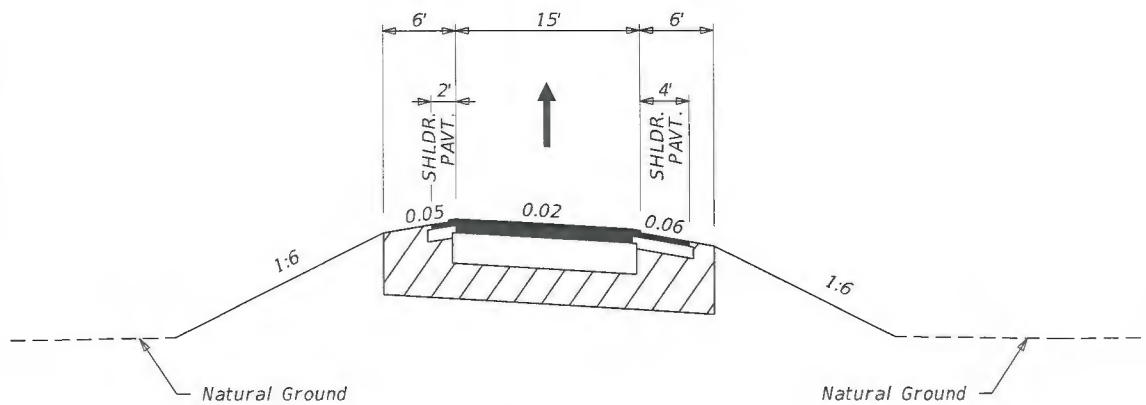

SR 400 (I-4)
ONE LANE RAMP

SHEET 3-8

APPROVED BY	FDOT CONCURRENCE	FHWA CONCURRENCE
ROBERT M. DENNEY, P.E. Engineer Of Record 58593 — Date 2/9/17	ANNETTE K. BRENNAN, P.E. FDOT District Design Engineer — Date 3/17/17	FHWA Transportation Engineer — Date 7/25/17

HNTB CORPORATION
610 CRESCENT EXEC. CT.
SUITE 400
LAKE MARY, FL 32746
(407) 805-0355
CERT OF AUTH NO 6500

ROBERT M. DENNEY LICENSE No. 58593 STATE OF FLORIDA PROFESSIONAL ENGINEER

PROJECT IDENTIFICATION

FINANCIAL PROJECT ID 432100-1-22-01 FEDERAL AID PROJECT NO. N/A COUNTY NAME SEMINOLE

SECTION NO. 77160 ROAD DESIGNATION SR 400 (I-4) LIMITS/MILEPOST MP 4.050 - 14.135

PROJECT DESCRIPTION WIDENING SR 400 (I-4) FROM WEST OF CR 532 TO WEST OF SR 435 KIRKMAN ROAD AND FROM 1 MILE EAST OF SR 434 TO 1/2 MILE EAST OF SR 472.

Ramp	Design Speed
SEGMENT 3	
I-4 EB GUL TO LAKE MARY BLVD	50
I-4 EB GUL TO LAKE EMMA RD	50
LAKE MARY BLVD TO I-4 WB GUL	50
LAKE MARY BLVD TO I-4 EB GUL	50
I-4 WB GUL TO LAKE MARY BLVD	50
CR 46A RAMP TO I-4 WB GUL	50
I-4 EB GUL RAMP TO CR 46A	50
I-4 WB TO CR 46A	50
SR 417 GUL RAMP TO I-4 WB GUL	50
I-4 EB EXPRESS LANES RAMP TO SR 417 GUL	50
I-4 WB GUL RAMP TO SR 417 SB	30
SR 417 NB RAMP TO I-4 WB GUL	50
SR 417 NB RAMP TO I-4 EB	50
SR 429 RAMP TO I-4 WB GUL	50

Ramp	Design Speed
SR 46 RAMP TO I-4 EB GUL	50
I-4 EB GUL RAMP TO SR 46	50
I-4 WB GUL RAMP TO SR 46	50
US 17/92 GUL RAMP TO I-4 WB GUL	50
I-4 EB GUL RAMP TO US 17/92	50
MONROE RD GUL RAMP TO I-4 EB GUL	50

PROPOSED ROADWAY TYPICAL SECTION

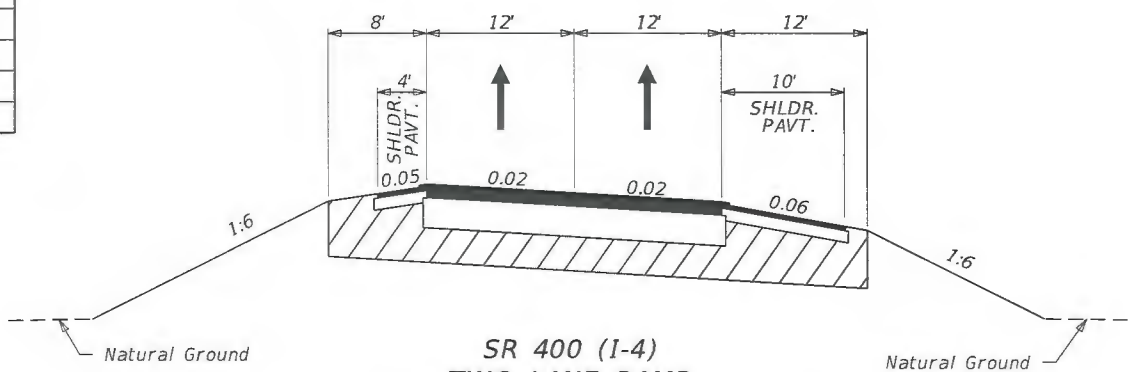

SR 400 (I-4)
TWO LANE RAMP

SHEET 3-9

APPROVED BY	FDOT CONCURRENCE	FHWA CONCURRENCE
ROBERT M. DENNEY, P.E. Date Engineer Of Record 58893 HNTB CORPORATION 610 CRESCENT EXEC. CT. SUITE 400 LAKE MARY, FL 32746 (407) 805-0355 CERT OF AUTH NO 6500	ANNETTE K. BRENNAN, P.E. FDOT District Design Engineer Date 3/17/17	FHWA Transportation Engineer Date 7/25/17

ROBERT M. DENNEY LICENSE 58893 STATE OF FLORIDA PROFESSIONAL ENGINEER

PROJECT IDENTIFICATION

FINANCIAL PROJECT ID 432100-1-22-01 FEDERAL AID PROJECT NO. N/A COUNTY NAME SEMINOLE

SECTION NO. 77160 ROAD DESIGNATION SR 400 (I-4) LIMITS/MILEPOST MP 4.050 - 14.135

PROJECT DESCRIPTION WIDENING SR 400 (I-4) FROM WEST OF CR 532 TO WEST OF SR 435 KIRKMAN ROAD AND FROM 1 MILE EAST OF SR 434 TO 1/2 MILE EAST OF SR 472.

Ramp	Design Speed
SEGMENT 3	
LAKE MARY BLVD TO I-4 WB GUL	50
I-4 EB TO LAKE MARY BLVD	50
CR 46A TO I-4 EB	50
SR 417 GUL RAMP TO I-4 EB GUL	50

PROPOSED ROADWAY TYPICAL SECTION

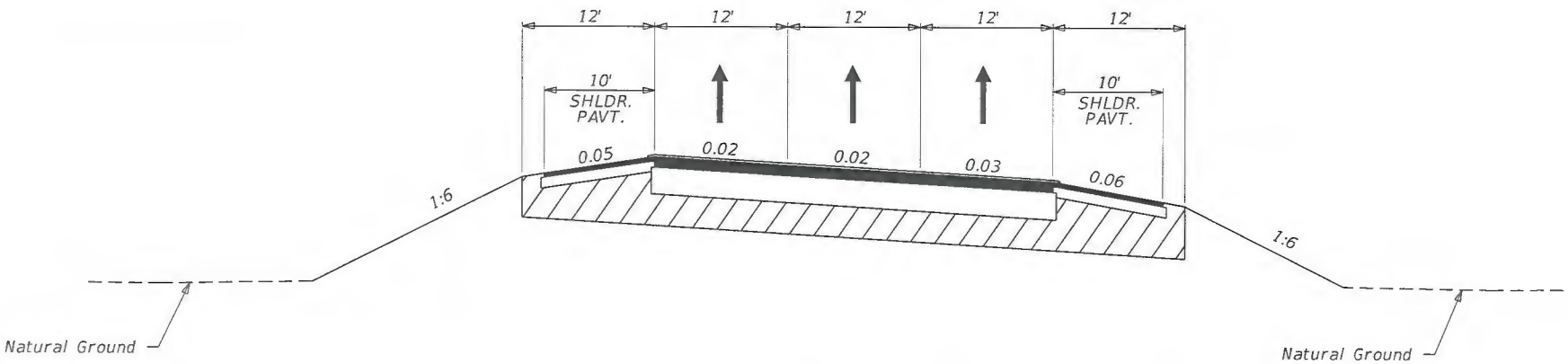

SR 400 (I-4)
THREE LANE RAMP

SHEET 3-10

APPROVED BY	FDOT CONCURRENCE	FHWA CONCURRENCE
ROBERT M. DENNEY, P.E. Date Engineer of Record 58593	ANNETTE K. BRENNAN, P.E. Date 3/17/17 FDOT District Design Engineer	FHWA Transportation Engineer Date 7/25/17

ROBERT M. DENNEY LICENSE No. 58593 STATE OF FLORIDA PROFESSIONAL ENGINEER

HNTB CORPORATION
610 CRESCENT EXEC. CT.
SUITE 400
LAKE MARY, FL 32746
(407) 805-0355
CERT OF AUTH NO 6500

mbacal 2/9/2017 2:39:36 PM \\LKMw00\pmwork3\Jobs\59219 - I4 SAMR\TECHPROD\Typical Section Package\TYPDRD01-RAMPS.DGN

PROJECT IDENTIFICATION

FINANCIAL PROJECT ID 432100-1-22-01 FEDERAL AID PROJECT NO. N/A COUNTY NAME SEMINOLE

SECTION NO. 77160 ROAD DESIGNATION SR 400 (I-4) LIMITS/MILEPOST MP 4.050 - 14.135

PROJECT DESCRIPTION WIDENING SR 400 (I-4) FROM WEST OF CR 532 TO WEST OF SR 435 KIRKMAN ROAD AND FROM 1 MILE EAST OF SR 434 TO 1/2 MILE EAST OF SR 472.

Ramp	Design Speed
SEGMENT 3	
LAKE EMMA RD TO I-4 WB GUL	50
LAKE EMMA RD TO I-4 EB GUL	50
CR 46A RAMP TO I-4 EB GUL	50
SR 429 NB RAMP TO I-4 EB	50
I-4 EB GUL TO SR 429	30

PROPOSED STRUCTURE TYPICAL SECTION

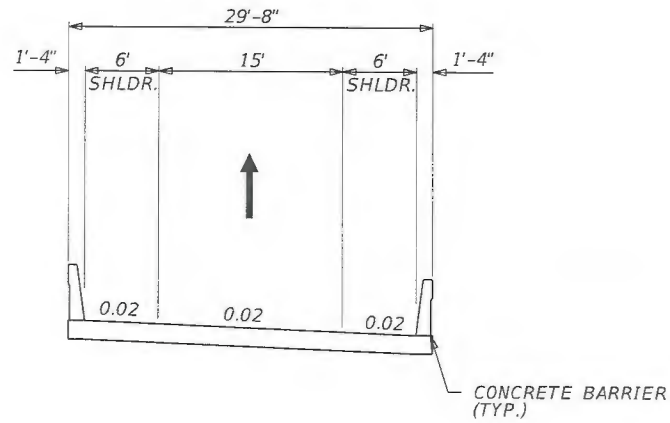

SR 400 (I-4)
ONE LANE BRIDGE RAMP

SHEET 3-11

APPROVED BY	FDOT CONCURRENCE	FHWA CONCURRENCE
ROBERT M. DENNEY, P.E. Date Engineer Of Record 58593 HNTB CORPORATION 610 CRESCENT EXEC. CT. SUITE 400 LAKE MARY, FL 32746 (407) 805-0355 CERT OF AUTH NO 6500	ANNETTE K. BRENNAN, P.E. FDOT District Design Engineer Date 3/17/17	FHWA Transportation Engineer Date 7/25/17

ROBERT M. DENNEY LICENSE No. 58593 STATE OF FLORIDA PROFESSIONAL ENGINEER

PROJECT IDENTIFICATION

FINANCIAL PROJECT ID 432100-1-22-01 FEDERAL AID PROJECT NO. N/A COUNTY NAME SEMINOLE

SECTION NO. 77160 ROAD DESIGNATION SR 400 (I-4) LIMITS/MILEPOST MP 4.050 - 14.135

PROJECT DESCRIPTION WIDENING SR 400 (I-4) FROM WEST OF CR 532 TO WEST OF SR 435 KIRKMAN ROAD AND FROM 1 MILE EAST OF SR 434 TO 1/2 MILE EAST OF SR 472.

Ramp	Design Speed
SEGMENT 3	
US 17/92 GUL RAMP TO I-4 WB GUL	50
MONROE RD GUL RAMP TO I-4 EB GUL	50

PROPOSED STRUCTURE TYPICAL SECTION

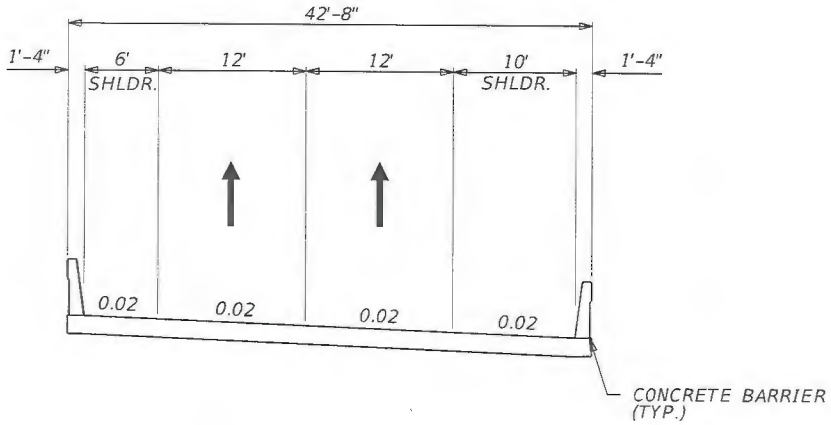

SR 400 (I-4)
TWO LANE BRIDGE RAMP

SHEET 3-12

APPROVED BY	FDOT CONCURRENCE	FHWA CONCURRENCE
ROBERT M. DENNEY, P.E. Engineer of Record 58593 — Date 2/9/17	ANNETTE K. BRENNAN, P.E. FDOT District Design Engineer — Date 3/17/17	FHWA Transportation Engineer — Date 7/25/17

HNTB CORPORATION
610 CRESCENT EXEC. CT.
SUITE 400
LAKE MARY, FL 32746
(407) 805-0355
CERT OF AUTH NO 6500

ROBERT M. DENNEY LICENSE No. 58593 STATE OF FLORIDA PROFESSIONAL ENGINEER

PROJECT IDENTIFICATION

FINANCIAL PROJECT ID 432100-1-22-01 FEDERAL AID PROJECT NO. N/A COUNTY NAME SEMINOLE

SECTION NO. 77160 ROAD DESIGNATION SR 400 (I-4) LIMITS/MILEPOST MP 4.050 - 14.135

PROJECT DESCRIPTION WIDENING SR 400 (I-4) FROM WEST OF CR 532 TO WEST OF SR 435 KIRKMAN ROAD AND FROM 1 MILE EAST OF SR 434 TO 1/2 MILE EAST OF SR 472.

Ramp	Design Speed
SEGMENT 3	
SR 417 TO I-4 EB	50
I-4 WB GUL TO US 17/92	50

PROPOSED STRUCTURE TYPICAL SECTION

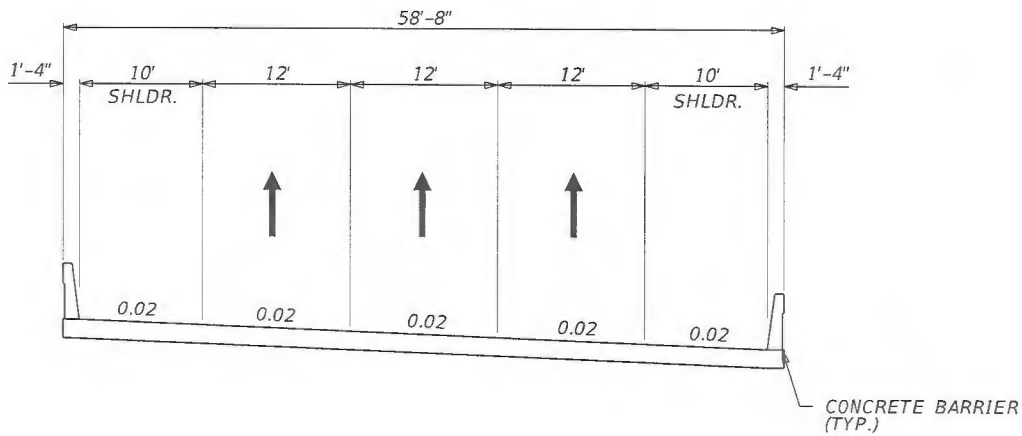

SR 400 (I-4)
THREE LANE BRIDGE RAMP

SHEET 3-13

APPROVED BY	FDOT CONCURRENCE	FHWA CONCURRENCE
ROBERT M. DENNEY, P.E. Date Engineer of Record 58593	ANNETTE K. BRENNAN, P.E. FDOT District Design Engineer Date 3/17/17	FHWA Transportation Engineer Date 7/25/17

HNTB CORPORATION
610 CRESCENT EXEC. CT.
SUITE 400
LAKE MARY, FL 32746
(407) 805-0355
CERT OF AUTH NO 6500

ROBERT M. DENNEY LICENSE No. 58593 STATE OF FLORIDA PROFESSIONAL ENGINEER

PROJECT IDENTIFICATION

FINANCIAL PROJECT ID: 432100-1-22-01 COUNTY (SECTION): SEMINOLE (77160)

PROJECT DESCRIPTION: WIDENING SR 400 (I-4) FROM WEST OF CR 532 TO WEST OF SR 435 (KIRKMAN RD.) AND FROM 1 MILE EAST OF SR 434 TO 1/2 MILE EAST OF SR 472.

PROJECT CONTROLS (EE WILLIAMSON ROAD)

FUNCTIONAL CLASSIFICATION

( ) RURAL
(X) URBAN

( ) FREEWAY/EXPWY. ( ) MAJOR COLL.
( ) PRINCIPAL ART. (X) MINOR COLL.
( ) MINOR ART. ( ) LOCAL

HIGHWAY SYSTEM

Yes	No	
( )	(X)	NATIONAL HIGHWAY SYSTEM
( )	(X)	FLORIDA INTRASTATE HIGHWAY SYSTEM
( )	(X)	STRATEGIC INTERMODAL SYSTEM
( )	(X)	STATE HIGHWAY SYSTEM
(X)	( )	OFF STATE HIGHWAY SYSTEM

ACCESS CLASSIFICATION

( ) 1 - FREEWAY
( ) 2 - RESTRICTIVE w/Service Roads
( ) 3 - RESTRICTIVE w/660 ft. Connection Spacing
(X) 4 - NON-RESTRICTIVE w/2640 ft. Signal Spacing
( ) 5 - RESTRICTIVE w/440 ft. Connection Spacing
( ) 6 - NON-RESTRICTIVE w/1320 ft. Signal Spacing
( ) 7 - BOTH MEDIAN TYPES

TRAFFIC

	YEAR	AADT
OPENING	2020	10,983
INTERIM	2030	11,093
DESIGN	2040	11,205

DESIGN SPEED 40 MPH
POSTED SPEED 35 MPH

DISTRIBUTION
K 9.0
D 53.10
T_{24} 9.5%

CRITERIA

(X) NEW CONSTRUCTION / RECONSTRUCTION
( ) RRR INTERSTATE / FREEWAY
( ) RRR NON-INTERSTATE / FREEWAY
( ) TDLC / NEW CONSTRUCTION / RECONSTRUCTION
( ) TDLC / RRR
( ) MANUAL OF UNIFORM MINIMUM STANDARDS (FLORIDA GREENBOOK) (OFF-STATE HIGHWAY SYSTEM ONLY)

DESIGN SPEED APPROVALS

A K Brennan 3/17/17
DISTRICT DESIGN ENGINEER DATE

James Stringfellow 4/10/17
DISTRICT TRAFFIC OPERATIONS ENGINEER DATE

LIST ANY POTENTIAL EXCEPTIONS AND VARIATIONS RELATED TO TYPICAL SECTION ELEMENTS:

N/A

LIST MAJOR STRUCTURES LOCATION/DESCRIPTION - REQUIRING INDEPENDENT STRUCTURE DESIGN:

EE WILLIAMSON ROAD (770018)

LIST MAJOR UTILITIES WITHIN PROJECT CORRIDOR:
GAS (CENTRAL FLORIDA GAS)
WATER (SEMINOLE COUNTY UTILITIES)
COMMUNICATIONS (BRIGHTHOUSE NETWORKS, COMCAST, LEVEL 3, VERIZON)
WASTEWATER (SEMINOLE COUNTY UTILITIES)
ELECTRIC (DUKE ENERGY DISTRIBUTION, DUKE ENERGY TRANSMISSION)

LIST OTHER INFORMATION PERTINENT TO DESIGN OF PROJECT:

N/A

PROJECT IDENTIFICATION

FINANCIAL PROJECT ID 432100-1-22-01 FEDERAL AID PROJECT NO. N/A COUNTY NAME SEMINOLE

SECTION NO. 77160 ROAD DESIGNATION SR 400 (I-4) LIMITS/MILEPOST MP 4.050 - 14.135

PROJECT DESCRIPTION WIDENING SR 400 (I-4) FROM WEST OF CR 532 TO WEST OF SR 435 KIRKMAN ROAD AND FROM 1 MILE EAST OF SR 434 TO 1/2 MILE EAST OF SR 472.

PROPOSED STRUCTURE TYPICAL SECTION

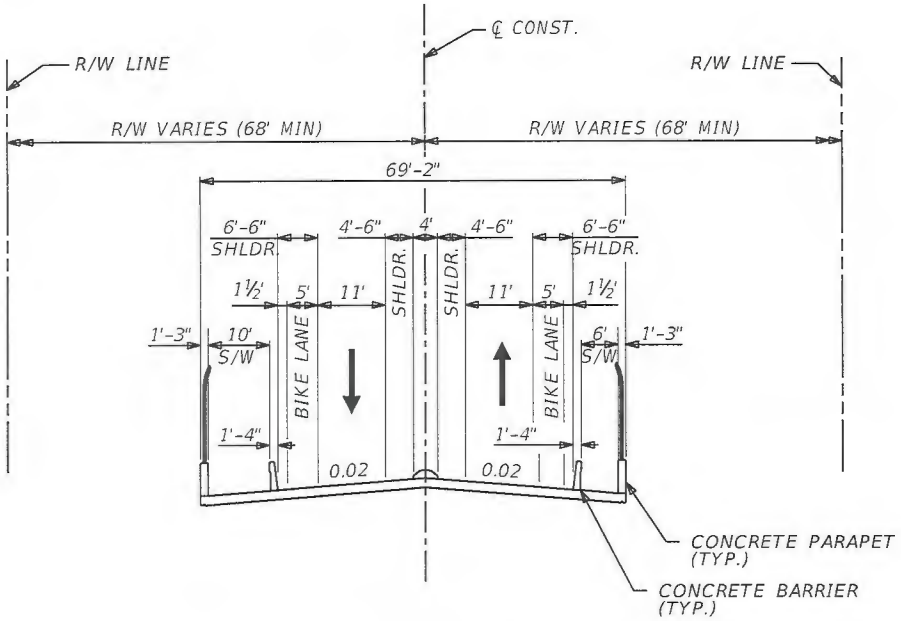

DESIGN SPEED = 40 MPH

EE WILLIAMSON BRIDGE SECTION

SHEET 3-15

APPROVED BY	FDOT CONCURRENCE	FHWA CONCURRENCE	COUNTY CONCURRENCE
ROBERT M. DENNEY, P.E. Engineer of Record 58593 Date 6/1/17	MARIO BIZZIO, P.E. FDOT District Design Engineer 6/2/17 Date	FHWA Transportation Engineer 7/25/17 Date	County Engineer 06-05-17 Date

HNTB CORPORATION
610 CRESCENT EXEC. CT.
SUITE 400
LAKE MARY, FL 32746
(407) 805-0355
CERT OF AUTH NO 6500

ROBERT M. DENNEY LICENSE No. 58593 STATE OF FLORIDA PROFESSIONAL ENGINEER

amourad 6/1/2017 11:47:28 AM \\LKMw00\pmwork3\Jobs\59219 - I4 SAMR\TECHPROD\Typical Section Package\TYPDRD01-SEG-3.DGN

PROJECT IDENTIFICATION

FINANCIAL PROJECT ID 432100-1-22-01 FEDERAL AID PROJECT NO. N/A COUNTY NAME SEMINOLE

SECTION NO. 77160 ROAD DESIGNATION SR 400 (I-4) LIMITS/MILEPOST MP 4.050 - 14.135

PROJECT DESCRIPTION WIDENING SR 400 (I-4) FROM WEST OF CR 532 TO WEST OF SR 435 KIRKMAN ROAD AND FROM 1 MILE EAST OF SR 434 TO 1/2 MILE EAST OF SR 472.

PROPOSED ROADWAY TYPICAL SECTION

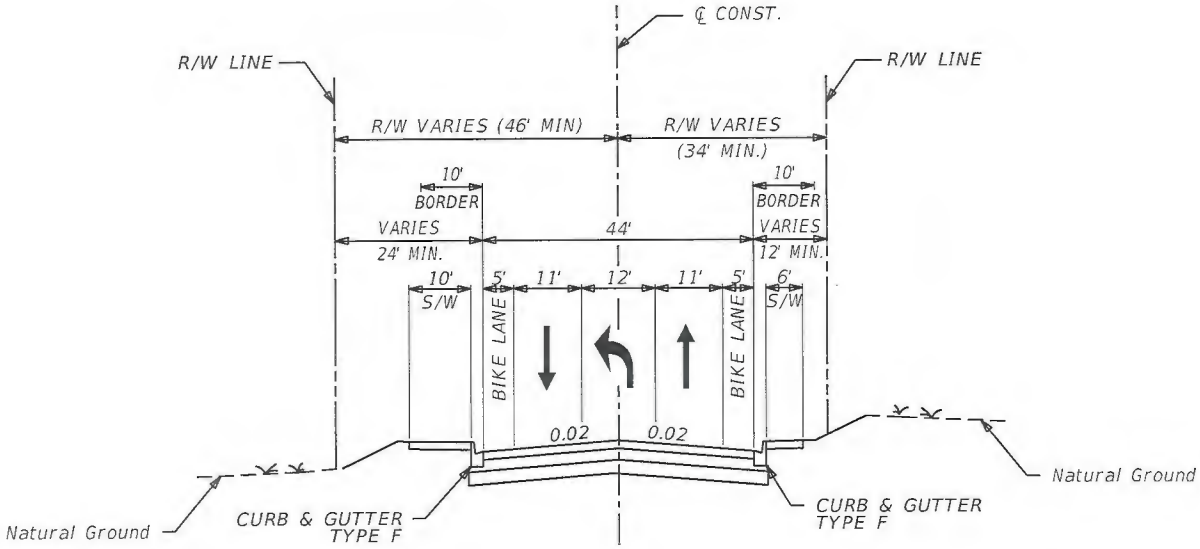

DESIGN SPEED = 40 MPH

EE WILLIAMSON ROADWAY SECTION

SHEET 3-16

ROBERT M. DENNEY LICENSE No. 58593 STATE OF FLORIDA PROFESSIONAL ENGINEER

APPROVED BY	FDOT CONCURRENCE	FHWA CONCURRENCE	COUNTY CONCURRENCE
ROBERT M. DENNEY, P.E. Date Engineer Of Record 58593	MARIO BIZZIO, P.E. FDOT District Design Engineer 6/2/17 Date	FHWA Transportation Engineer 7/25/17 Date	County Engineer 06-05-17 Date

HNTB CORPORATION
610 CRESCENT EXEC. CT.
SUITE 400
LAKE MARY, FL 32746
(407) 805-0355
CERT OF AUTH NO 6500

amourad 6/1/2017 11:47:29 AM \\LKMw00\pmwork3\Jobs\59219 - I4 SAMR\TECHPROD\Typical Section Package\TYPDRD01-SEG-3.DGN

PROJECT IDENTIFICATION

FINANCIAL PROJECT ID 432100-1-22-01 FEDERAL AID PROJECT NO. N/A COUNTY NAME SEMINOLE

SECTION NO. 77160 ROAD DESIGNATION SR 400 (I-4) LIMITS/MILEPOST MP 4.050 - 14.135

PROJECT DESCRIPTION WIDENING SR 400 (I-4) FROM WEST OF CR 532 TO WEST OF SR 435 KIRKMAN ROAD AND FROM 1 MILE EAST OF SR 434 TO 1/2 MILE EAST OF SR 472.

PROPOSED ROADWAY TYPICAL SECTION

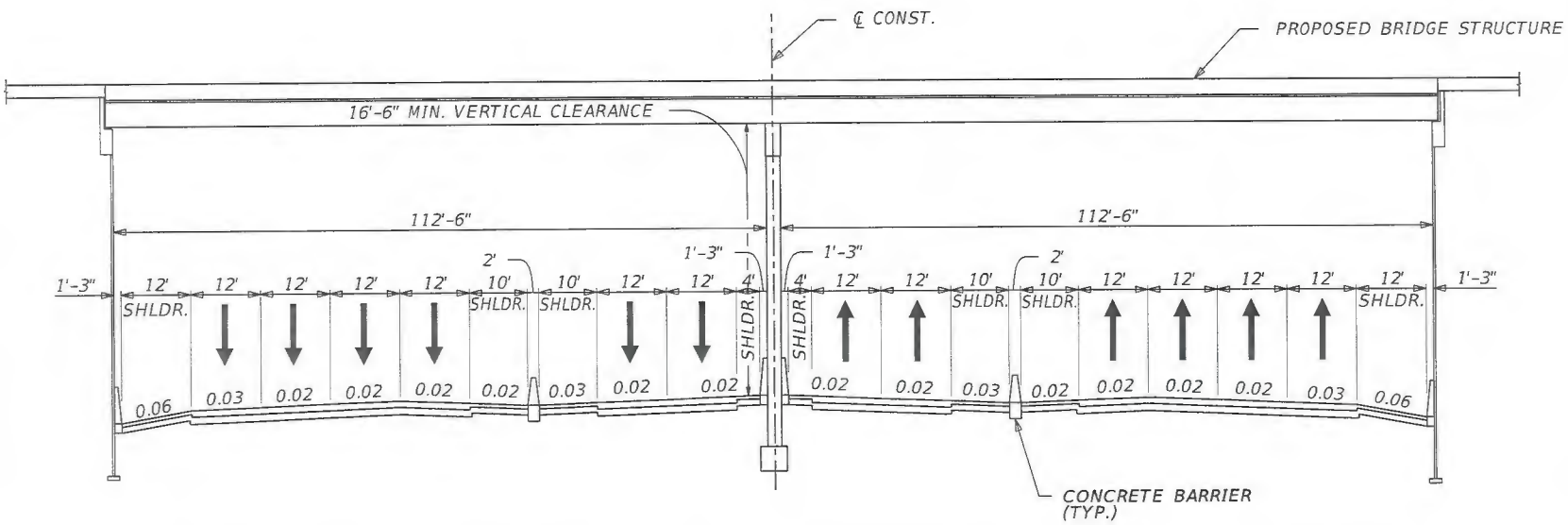

DESIGN SPEED = 70 MPH

SR 400 (I-4) UNDER EE WILLIAMSON ROAD

SHEET 3-17

ROBERT M. DENNEY LICENSE No. 58593 STATE OF FLORIDA PROFESSIONAL ENGINEER

APPROVED BY	FDOT CONCURRENCE	FHWA CONCURRENCE
ROBERT M. DENNEY, P.E. Engineer Of Record 58593 — 2/9/17 Date	ANNETTE K. BRENNAN, P.E. FDOT District Design Engineer — 3/17/17 Date	FHWA Transportation Engineer — 7/25/17 Date

HNTB CORPORATION
610 CRESCENT EXEC. CT.
SUITE 400
LAKE MARY, FL 32746
(407) 805-0355
CERT OF AUTH NO 6500

mbacal 2/9/2017 2:39:39 PM \\LKMw00\pmwork3\Jobs\59219 - 14 SAMR\TECHPROD\Typical Section Package\TYPDRD01-SEG-3.DGN

PROJECT IDENTIFICATION

FINANCIAL PROJECT ID: 432100-1-22-01 COUNTY (SECTION): SEMINOLE (77160)

PROJECT DESCRIPTION: WIDENING SR 400 (I-4) FROM WEST OF CR 532 TO WEST OF SR 435 (KIRKMAN RD.) AND FROM 1 MILE EAST OF SR 434 TO 1/2 MILE EAST OF SR 472.

PROJECT CONTROLS (LAKE MARY BOULEVARD)

FUNCTIONAL CLASSIFICATION

( ) RURAL
(X) URBAN

( ) FREEWAY/EXPWY. ( ) MAJOR COLL.
(X) PRINCIPAL ART. ( ) MINOR COLL.
( ) MINOR ART. ( ) LOCAL

HIGHWAY SYSTEM

Yes	No	
( )	(X)	NATIONAL HIGHWAY SYSTEM
( )	(X)	FLORIDA INTRASTATE HIGHWAY SYSTEM
( )	(X)	STRATEGIC INTERMODAL SYSTEM
( )	(X)	STATE HIGHWAY SYSTEM
(X)	( )	OFF STATE HIGHWAY SYSTEM

ACCESS CLASSIFICATION

( ) 1 - FREEWAY
( ) 2 - RESTRICTIVE w/Service Roads
( ) 3 - RESTRICTIVE w/660 ft. Connection Spacing
( ) 4 - NON-RESTRICTIVE w/2640 ft. Signal Spacing
(X) 5 - RESTRICTIVE w/440 ft. Connection Spacing
( ) 6 - NON-RESTRICTIVE w/1320 ft. Signal Spacing
( ) 7 - BOTH MEDIAN TYPES

TRAFFIC

	YEAR	AADT
OPENING	2020	39,000
INTERIM	2030	43,000
DESIGN	2040	47,000

		DISTRIBUTION	
DESIGN SPEED	30 MPH	K	9.0
POSTED SPEED	30 MPH	D	53.10
		T_{24}	9.5%

CRITERIA

(X) NEW CONSTRUCTION / RECONSTRUCTION
( ) RRR INTERSTATE / FREEWAY
( ) RRR NON-INTERSTATE / FREEWAY
( ) TDLC / NEW CONSTRUCTION / RECONSTRUCTION
( ) TDLC / RRR
( ) MANUAL OF UNIFORM MINIMUM STANDARDS (FLORIDA GREENBOOK) (OFF-STATE HIGHWAY SYSTEM ONLY)

DESIGN SPEED APPROVALS

A K Brennan — 3/17/17
DISTRICT DESIGN ENGINEER — DATE

[illegible] — 4/10/17
DISTRICT TRAFFIC OPERATIONS ENGINEER — DATE

LIST ANY POTENTIAL EXCEPTIONS AND VARIATIONS RELATED TO TYPICAL SECTION ELEMENTS:

N/A

LIST MAJOR STRUCTURES LOCATION/DESCRIPTION - REQUIRING INDEPENDENT STRUCTURE DESIGN:

LAKE MARY BOULEVARD (770040, 770039)

LIST MAJOR UTILITIES WITHIN PROJECT CORRIDOR:

GAS (CENTRAL FLORIDA GAS)
WATER (SEMINOLE COUNTY UTILITIES)
COMMUNICATIONS (BRIGHTHOUSE NETWORKS, COMCAST, LEVEL 3, VERIZON)
WASTEWATER (SEMINOLE COUNTY UTILITIES)
ELECTRIC (DUKE ENERGY DISTRIBUTION, DUKE ENERGY TRANSMISSION)

LIST OTHER INFORMATION PERTINENT TO DESIGN OF PROJECT:

N/A

PROJECT IDENTIFICATION

FINANCIAL PROJECT ID 432100-1-22-01 FEDERAL AID PROJECT NO. N/A COUNTY NAME SEMINOLE

SECTION NO. 77160 ROAD DESIGNATION SR 400 (I-4) LIMITS/MILEPOST MP 4.050 - 14.135

PROJECT DESCRIPTION WIDENING SR 400 (I-4) FROM WEST OF CR 532 TO WEST OF SR 435 KIRKMAN ROAD AND FROM 1 MILE EAST OF SR 434 TO 1/2 MILE EAST OF SR 472.

PROPOSED STRUCTURE TYPICAL SECTION

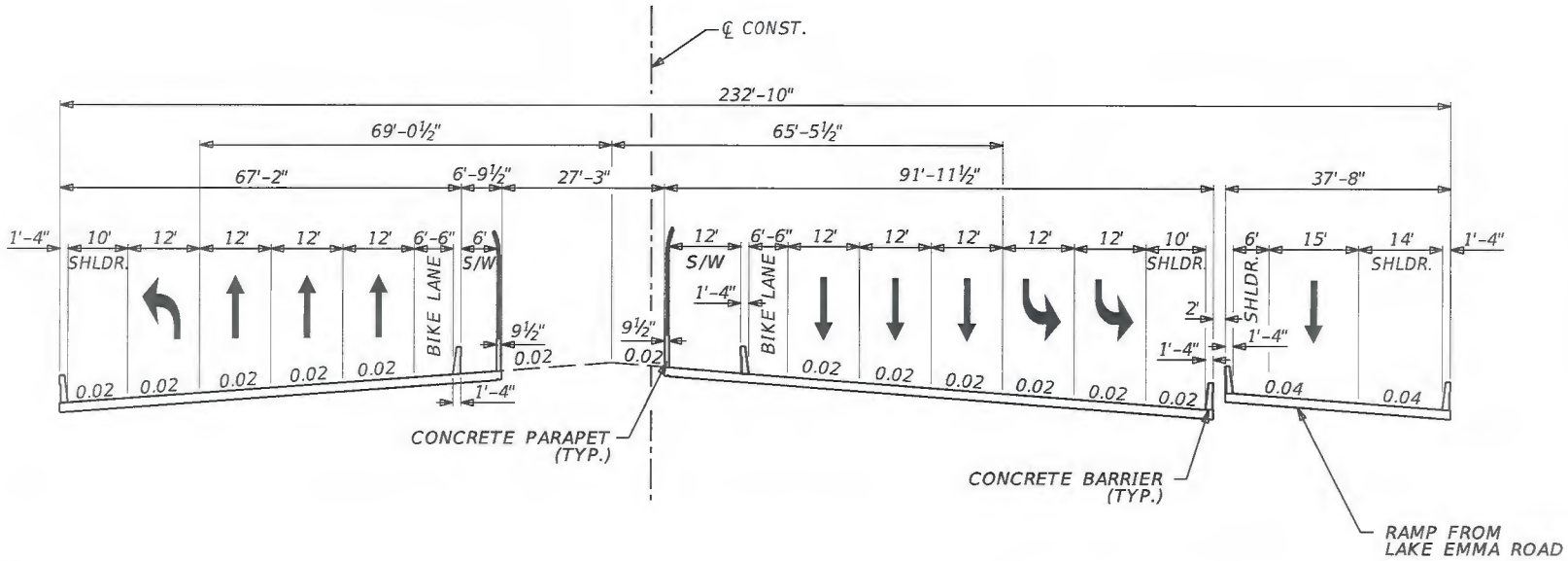

LAKE MARY BOULEVARD BRIDGE SECTION
DIVERGING DIAMOND INTERCHANGE

SHEET 3-19

APPROVED BY	FDOT CONCURRENCE	FHWA CONCURRENCE	COUNTY CONCURRENCE
ROBERT M. DENNEY, P.E. Engineer of Record 58593 — Date 3/17	ANNETTE K. BRENNAN, P.E. FDOT District Design Engineer — Date 3/17/17	FHWA Transportation Engineer — Date 7/25/17	County Engineer — Date 06-05-17

HNTB CORPORATION
610 CRESCENT EXEC. CT.
SUITE 400
LAKE MARY, FL 32746
(407) 805-0355
CERT OF AUTH NO 6500

ROBERT M. DENNEY LICENSE No. 58593 STATE OF FLORIDA PROFESSIONAL ENGINEER

mbacal 2/27/2017 7:22:40 PM \\LKMw00\pmwork3\Jobs\59219 - I4 SAMR\TECHPROD\Typical Section Package\TYPDRD01-SEG-3.DGN

PROJECT IDENTIFICATION

FINANCIAL PROJECT ID 432100-1-22-01 FEDERAL AID PROJECT NO. N/A COUNTY NAME SEMINOLE

SECTION NO. 77160 ROAD DESIGNATION SR 400 (I-4) LIMITS/MILEPOST MP 4.050 - 14.135

PROJECT DESCRIPTION WIDENING SR 400 (I-4) FROM WEST OF CR 532 TO WEST OF SR 435 KIRKMAN ROAD AND FROM 1 MILE EAST OF SR 434 TO 1/2 MILE EAST OF SR 472.

PROPOSED ROADWAY TYPICAL SECTION

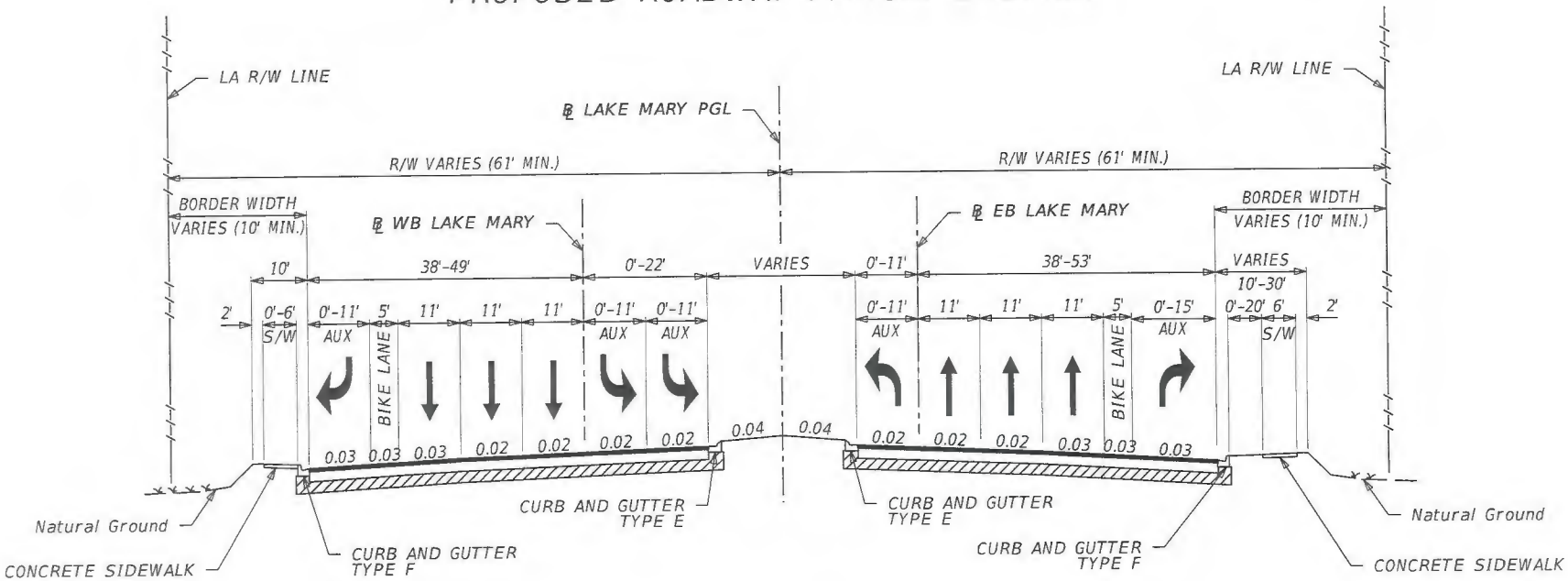

DESIGN SPEED = 30 MPH

LAKE MARY BOULEVARD ROADWAY SECTION

(EAST OF SR 400)

SHEET 3-20

APPROVED BY	FDOT CONCURRENCE	FHWA CONCURRENCE	COUNTY CONCURRENCE
ROBERT M. DENNEY, P.E. Date Engineer of Record 58593 HNTB CORPORATION 610 CRESCENT EXEC. CT. SUITE 400 LAKE MARY, FL 32746 (407) 805-0355 CERT OF AUTH NO 6500	ANNETTE K. BRENNAN, P.E. FDOT District Design Engineer 3/17/17 Date	FHWA Transportation Engineer 7/25/17 Date	County Engineer 06-05-17 Date

ROBERT M. DENNEY LICENSE No 58593 STATE OF FLORIDA PROFESSIONAL ENGINEER 2/9/17

mbacal 2/9/2017 2:39:41 PM \\LKMw00\pmwork3\Jobs\59219 - I4 SAMR\TECHPROD\Typical Section Package\TYPDRD01-SEG-3.DGN

PROJECT IDENTIFICATION

FINANCIAL PROJECT ID 432100-1-22-01 FEDERAL AID PROJECT NO. N/A COUNTY NAME SEMINOLE

SECTION NO. 77160 ROAD DESIGNATION SR 400 (I-4) LIMITS/MILEPOST MP 4.050 - 14.135

PROJECT DESCRIPTION WIDENING SR 400 (I-4) FROM WEST OF CR 532 TO WEST OF SR 435 KIRKMAN ROAD AND FROM 1 MILE EAST OF SR 434 TO 1/2 MILE EAST OF SR 472.

PROPOSED ROADWAY TYPICAL SECTION

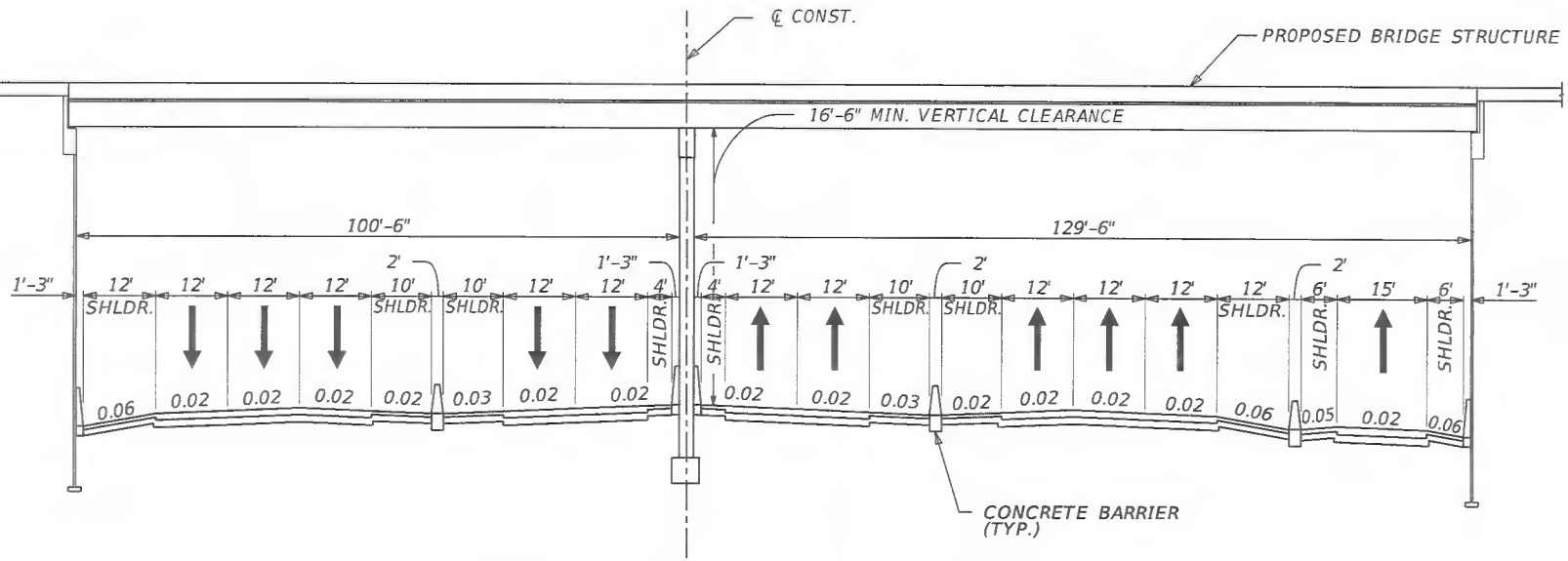

DESIGN SPEED = 70 MPH

SR 400 (I-4) UNDER LAKE MARY BOULEVARD

SHEET 3-21

APPROVED BY	FDOT CONCURRENCE	FHWA CONCURRENCE
ROBERT M. DENNEY, P.E. Date Engineer of Record 58593	ANNETTE K. BRENNAN, P.E. FDOT District Design Engineer 3/17/17 Date	FHWA Transportation Engineer 7/25/17 Date

HNTB CORPORATION
610 CRESCENT EXEC. CT.
SUITE 400
LAKE MARY, FL 32746
(407) 805-0355
CERT OF AUTH NO 6500

ROBERT M. DENNEY LICENSE No 58593 STATE OF FLORIDA PROFESSIONAL ENGINEER

PROJECT IDENTIFICATION

FINANCIAL PROJECT ID: 432100-1-22-01 COUNTY (SECTION): SEMINOLE (77160)

PROJECT DESCRIPTION: WIDENING SR 400 (I-4) FROM WEST OF CR 532 TO WEST OF SR 435 (KIRKMAN RD.) AND FROM 1 MILE EAST OF SR 434 TO 1/2 MILE EAST OF SR 472.

PROJECT CONTROLS (LAKE EMMA ROAD)

FUNCTIONAL CLASSIFICATION

( ) RURAL
(X) URBAN

( ) FREEWAY/EXPWY. ( ) MAJOR COLL.
( ) PRINCIPAL ART. (X) MINOR COLL.
( ) MINOR ART. ( ) LOCAL

HIGHWAY SYSTEM

Yes	No	
( )	(X)	NATIONAL HIGHWAY SYSTEM
( )	(X)	FLORIDA INTRASTATE HIGHWAY SYSTEM
( )	(X)	STRATEGIC INTERMODAL SYSTEM
( )	(X)	STATE HIGHWAY SYSTEM
(X)	( )	OFF STATE HIGHWAY SYSTEM

ACCESS CLASSIFICATION

( ) 1 - FREEWAY
( ) 2 - RESTRICTIVE w/Service Roads
( ) 3 - RESTRICTIVE w/660 ft. Connection Spacing
( ) 4 - NON-RESTRICTIVE w/2640 ft. Signal Spacing
(X) 5 - RESTRICTIVE w/440 ft. Connection Spacing
( ) 6 - NON-RESTRICTIVE w/1320 ft. Signal Spacing
( ) 7 - BOTH MEDIAN TYPES

TRAFFIC

	YEAR	AADT
OPENING	2020	29,000
INTERIM	2030	32,000
DESIGN	2040	35,000

DESIGN SPEED 45 MPH
POSTED SPEED 45 MPH

DISTRIBUTION

K	9.0
D	53.10
T_{24}	10.2%

CRITERIA

(X) NEW CONSTRUCTION / RECONSTRUCTION
( ) RRR INTERSTATE / FREEWAY
( ) RRR NON-INTERSTATE / FREEWAY
( ) TDLC / NEW CONSTRUCTION / RECONSTRUCTION
( ) TDLC / RRR
( ) MANUAL OF UNIFORM MINIMUM STANDARDS (FLORIDA GREENBOOK) (OFF-STATE HIGHWAY SYSTEM ONLY)

DESIGN SPEED APPROVALS

AK Brennan — 3/17/17
DISTRICT DESIGN ENGINEER — DATE

[illegible] — 4/10/17
DISTRICT TRAFFIC OPERATIONS ENGINEER — DATE

LIST ANY POTENTIAL EXCEPTIONS AND VARIATIONS RELATED TO TYPICAL SECTION ELEMENTS:

N/A

LIST MAJOR STRUCTURES LOCATION/DESCRIPTION - REQUIRING INDEPENDENT STRUCTURE DESIGN:

N/A

LIST MAJOR UTILITIES WITHIN PROJECT CORRIDOR:
GAS (CENTRAL FLORIDA GAS)
WATER (SEMINOLE COUNTY UTILITIES)
COMMUNICATIONS (BRIGHTHOUSE NETWORKS, COMCAST, LEVEL 3, VERIZON)
WASTEWATER (SEMINOLE COUNTY UTILITIES)
ELECTRIC (DUKE ENERGY DISTRIBUTION, DUKE ENERGY TRANSMISSION)

LIST OTHER INFORMATION PERTINENT TO DESIGN OF PROJECT:

N/A

PROJECT IDENTIFICATION

FINANCIAL PROJECT ID 432100-1-22-01 FEDERAL AID PROJECT NO. N/A COUNTY NAME SEMINOLE

SECTION NO. 77160 ROAD DESIGNATION SR 400 (I-4) LIMITS/MILEPOST MP 4.050 - 14.135

PROJECT DESCRIPTION WIDENING SR 400 (I-4) FROM WEST OF CR 532 TO WEST OF SR 435 KIRKMAN ROAD AND FROM 1 MILE EAST OF SR 434 TO 1/2 MILE EAST OF SR 472.

PROPOSED ROADWAY TYPICAL SECTION

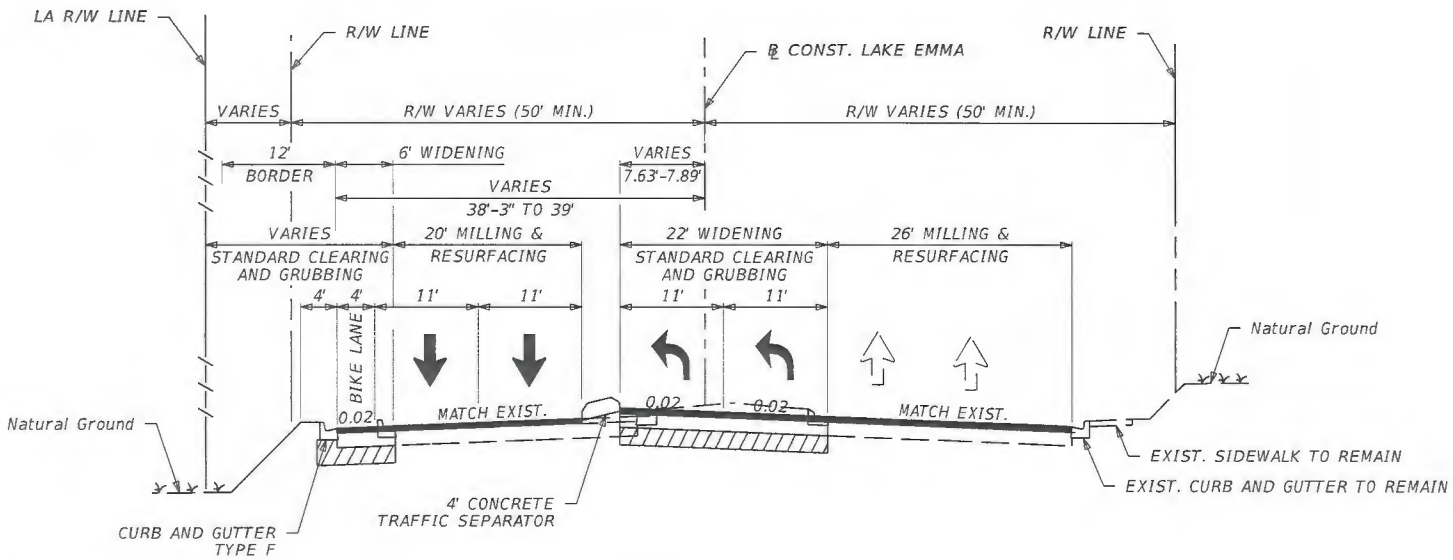

DESIGN SPEED = 45 MPH

LAKE EMMA ROAD ROADWAY SECTION

SHEET 3-23

APPROVED BY	FDOT CONCURRENCE	FHWA CONCURRENCE
ROBERT M. DENNEY, P.E. Date Engineer of Record 58593 HNTB CORPORATION 610 CRESCENT EXEC. CT. SUITE 400 LAKE MARY, FL 32746 (407) 805-0355 CERT OF AUTH NO 6500	ANNETTE K. BRENNAN, P.E. FDOT District Design Engineer 3/17/17 Date	FHWA Transportation Engineer 7/25/17 Date

ROBERT M. DENNEY LICENSE No. 58593 STATE OF FLORIDA PROFESSIONAL ENGINEER

mbacal 2/9/2017 2:39:43 PM \\LKMw00\pmwork3\Jobs\59219 - I4 SAMR\TECHPROD\Typical Section Package\TYPDRD01-SEG-3.DGN

PROJECT IDENTIFICATION

FINANCIAL PROJECT ID: 432100-1-22-01 COUNTY (SECTION): SEMINOLE (77160)

PROJECT DESCRIPTION: WIDENING SR 400 (I-4) FROM WEST OF CR 532 TO WEST OF SR 435 (KIRKMAN RD.) AND FROM 1 MILE EAST OF SR 434 TO 1/2 MILE EAST OF SR 472.

PROJECT CONTROLS (RINEHART ROAD)

FUNCTIONAL CLASSIFICATION

( ) RURAL
(X) URBAN

( ) FREEWAY/EXPWY. (X) MAJOR COLL.
( ) PRINCIPAL ART. ( ) MINOR COLL.
( ) MINOR ART. ( ) LOCAL

HIGHWAY SYSTEM

Yes	No	
( )	(X)	NATIONAL HIGHWAY SYSTEM
( )	(X)	FLORIDA INTRASTATE HIGHWAY SYSTEM
( )	(X)	STRATEGIC INTERMODAL SYSTEM
( )	(X)	STATE HIGHWAY SYSTEM
(X)	( )	OFF STATE HIGHWAY SYSTEM

ACCESS CLASSIFICATION

( ) 1 - FREEWAY
( ) 2 - RESTRICTIVE w/Service Roads
( ) 3 - RESTRICTIVE w/660 ft. Connection Spacing
( ) 4 - NON-RESTRICTIVE w/2640 ft. Signal Spacing
(X) 5 - RESTRICTIVE w/440 ft. Connection Spacing
( ) 6 - NON-RESTRICTIVE w/1320 ft. Signal Spacing
( ) 7 - BOTH MEDIAN TYPES

TRAFFIC

	YEAR	AADT
OPENING	2020	44,000
INTERIM	2030	48,900
DESIGN	2040	53,800

DESIGN SPEED 45 MPH
POSTED SPEED 45 MPH

DISTRIBUTION

K	9.0
D	53.10
T_{24}	10.2%

CRITERIA

(X) NEW CONSTRUCTION / RECONSTRUCTION
( ) RRR INTERSTATE / FREEWAY
( ) RRR NON-INTERSTATE / FREEWAY
( ) TDLC / NEW CONSTRUCTION / RECONSTRUCTION
( ) TDLC / RRR
( ) MANUAL OF UNIFORM MINIMUM STANDARDS (FLORIDA GREENBOOK) (OFF-STATE HIGHWAY SYSTEM ONLY)

DESIGN SPEED APPROVALS

AK Brennan — 3/17/17
DISTRICT DESIGN ENGINEER — DATE

4/10/17
DISTRICT TRAFFIC OPERATIONS ENGINEER — DATE

LIST ANY POTENTIAL EXCEPTIONS AND VARIATIONS RELATED TO TYPICAL SECTION ELEMENTS:

N/A

LIST MAJOR STRUCTURES LOCATION/DESCRIPTION - REQUIRING INDEPENDENT STRUCTURE DESIGN:

N/A

LIST MAJOR UTILITIES WITHIN PROJECT CORRIDOR:

GAS (CENTRAL FLORIDA GAS)
WATER (SEMINOLE COUNTY UTILITIES)
COMMUNICATIONS (BRIGHTHOUSE NETWORKS, COMCAST, LEVEL 3, VERIZON)
WASTEWATER (SEMINOLE COUNTY UTILITIES)
ELECTRIC (DUKE ENERGY DISTRIBUTION, DUKE ENERGY TRANSMISSION)

LIST OTHER INFORMATION PERTINENT TO DESIGN OF PROJECT:

N/A

PROJECT IDENTIFICATION

FINANCIAL PROJECT ID 432100-1-22-01 FEDERAL AID PROJECT NO. N/A COUNTY NAME SEMINOLE

SECTION NO. 77160 ROAD DESIGNATION SR 400 (I-4) LIMITS/MILEPOST MP 4.050 - 14.135

PROJECT DESCRIPTION WIDENING SR 400 (I-4) FROM WEST OF CR 532 TO WEST OF SR 435 KIRKMAN ROAD AND FROM 1 MILE EAST OF SR 434 TO 1/2 MILE EAST OF SR 472.

PROPOSED ROADWAY TYPICAL SECTION

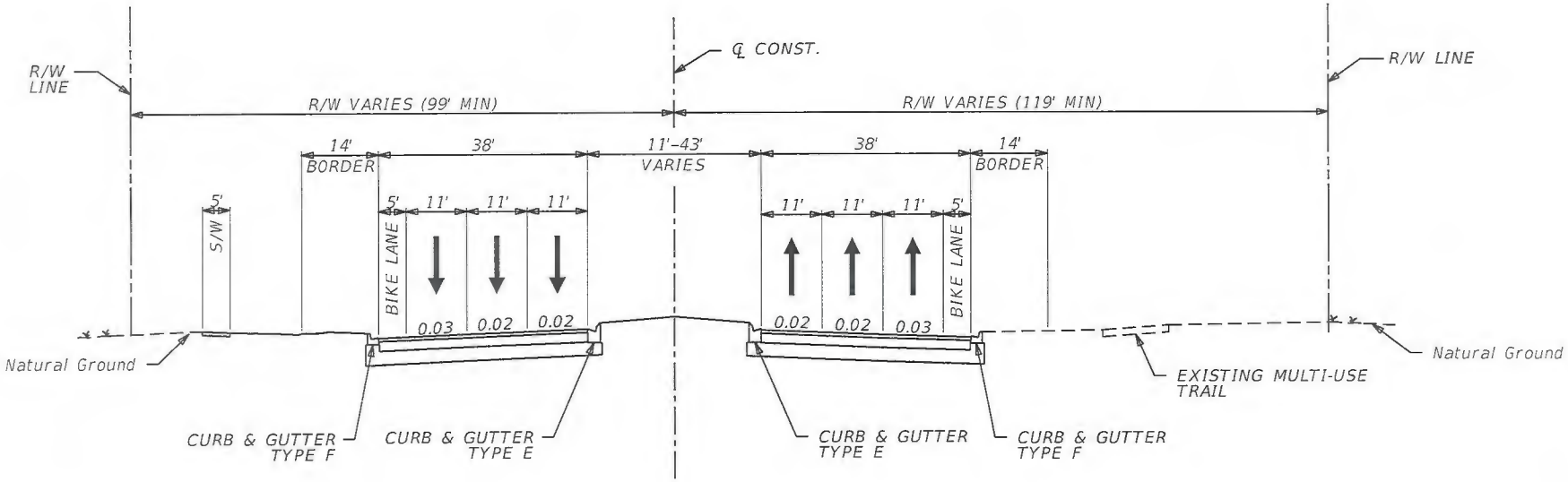

DESIGN SPEED = 45 MPH

RINEHART ROAD ROADWAY SECTION

SHEET 3-25

ROBERT M. DENNEY LICENSE No. 58593 STATE OF FLORIDA PROFESSIONAL ENGINEER

APPROVED BY	FDOT CONCURRENCE	FHWA CONCURRENCE	COUNTY CONCURRENCE
ROBERT M. DENNEY, P.E. Engineer Of Record 58593 — Date 5/31/17 — INTB CORPORATION, 610 CRESCENT EXEC. CT. SUITE 400, LAKE MARY, FL 32746, (407) 805-0355, CERT OF AUTH NO 6500	MARIO BIZZIO, P.E. FDOT District Design Engineer — Date 6/1/17	FHWA Transportation Engineer — Date 7/25/17	County Engineer — Date 06-05-17

amourad 5/31/2017 5:04:07 PM \\LKMw00\pmwork3\Jobs\59219 - 14 SAMR\TECHPROD\Typical Section Package\TYPDRD01-SEG-3.DGN

PROJECT IDENTIFICATION

FINANCIAL PROJECT ID 432100-1-22-01 FEDERAL AID PROJECT NO. N/A COUNTY NAME SEMINOLE

SECTION NO. 77160 ROAD DESIGNATION SR 400 (I-4) LIMITS/MILEPOST MP 4.050 - 14.135

PROJECT DESCRIPTION WIDENING SR 400 (I-4) FROM WEST OF CR 532 TO WEST OF SR 435 KIRKMAN ROAD AND FROM 1 MILE EAST OF SR 434 TO 1/2 MILE EAST OF SR 472.

PROPOSED ROADWAY TYPICAL SECTION

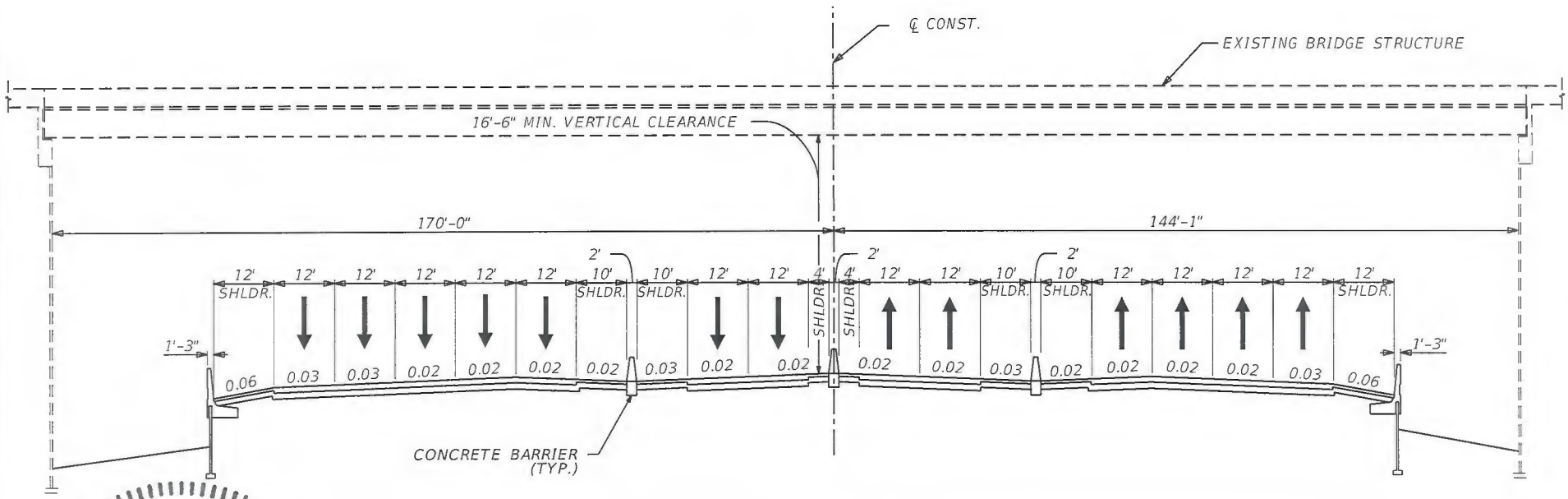

DESIGN SPEED = 70 MPH

SR 400 (I-4) UNDER CROSS SEMINOLE TRAIL

SHEET 3-26

ROBERT M. DENNEY LICENSE No. 58593 STATE OF FLORIDA PROFESSIONAL ENGINEER

APPROVED BY	FDOT CONCURRENCE	FHWA CONCURRENCE
ROBERT M. DENNEY, P.E. Engineer of Record 58593 — Date 5/31/17	MARIO BIZZIO, P.E. FDOT District Design Engineer — Date 6/1/17	FHWA Transportation Engineer — Date 7/25/17

HNTB CORPORATION
610 CRESCENT EXEC. CT.
SUITE 400
LAKE MARY, FL 32746
(407) 805-0355
CERT OF AUTH NO 6500

amourad 5/31/2017 5:04:08 PM \\LKMw00\pmwork3\Jobs\59219 - 14 SAMR\TECHPROD\Typical Section Package\TYPDRD01-SEG-3.DGN

PROJECT IDENTIFICATION

FINANCIAL PROJECT ID: 432100-1-22-01 COUNTY (SECTION): SEMINOLE (77160)

PROJECT DESCRIPTION: WIDENING SR 400 (I-4) FROM WEST OF CR 532 TO WEST OF SR 435 (KIRKMAN RD.) AND FROM 1 MILE EAST OF SR 434 TO 1/2 MILE EAST OF SR 472.

PROJECT CONTROLS (CR 46A)

FUNCTIONAL CLASSIFICATION

( ) RURAL
(X) URBAN

( ) FREEWAY/EXPWY. ( ) MAJOR COLL.
( ) PRINCIPAL ART. ( ) MINOR COLL.
(X) MINOR ART. ( ) LOCAL

HIGHWAY SYSTEM

Yes	No	
( )	(X)	NATIONAL HIGHWAY SYSTEM
( )	(X)	FLORIDA INTRASTATE HIGHWAY SYSTEM
( )	(X)	STRATEGIC INTERMODAL SYSTEM
( )	(X)	STATE HIGHWAY SYSTEM
(X)	( )	OFF STATE HIGHWAY SYSTEM

ACCESS CLASSIFICATION

( ) 1 - FREEWAY
( ) 2 - RESTRICTIVE w/Service Roads
( ) 3 - RESTRICTIVE w/660 ft. Connection Spacing
( ) 4 - NON-RESTRICTIVE w/2640 ft. Signal Spacing
(X) 5 - RESTRICTIVE w/440 ft. Connection Spacing
( ) 6 - NON-RESTRICTIVE w/1320 ft. Signal Spacing
( ) 7 - BOTH MEDIAN TYPES

TRAFFIC

	YEAR	AADT
OPENING	2020	46,000
INTERIM	2030	54,000
DESIGN	2040	61,000

DESIGN SPEED 30 MPH
POSTED SPEED 30 MPH

DISTRIBUTION

K	9.0
D	53.10
T 24	12.2%

CRITERIA

(X) NEW CONSTRUCTION / RECONSTRUCTION
( ) RRR INTERSTATE / FREEWAY
( ) RRR NON-INTERSTATE / FREEWAY
( ) TDLC / NEW CONSTRUCTION / RECONSTRUCTION
( ) TDLC / RRR
( ) MANUAL OF UNIFORM MINIMUM STANDARDS (FLORIDA GREENBOOK) (OFF-STATE HIGHWAY SYSTEM ONLY)

DESIGN SPEED APPROVALS

AK Brennan — 3/17/17
DISTRICT DESIGN ENGINEER — DATE

James A Hayes Jr — 4/10/17
DISTRICT TRAFFIC OPERATIONS ENGINEER — DATE

LIST ANY POTENTIAL EXCEPTIONS AND VARIATIONS RELATED TO TYPICAL SECTION ELEMENTS:

N/A

LIST MAJOR STRUCTURES LOCATION/DESCRIPTION - REQUIRING INDEPENDENT STRUCTURE DESIGN:

CR 46A (770077)

LIST MAJOR UTILITIES WITHIN PROJECT CORRIDOR:

GAS (CENTRAL FLORIDA GAS)
WATER (SEMINOLE COUNTY UTILITIES)
COMMUNICATIONS (BRIGHTHOUSE NETWORKS, COMCAST, LEVEL 3, VERIZON)
WASTEWATER (SEMINOLE COUNTY UTILITIES)
ELECTRIC (DUKE ENERGY DISTRIBUTION, DUKE ENERGY TRANSMISSION)

LIST OTHER INFORMATION PERTINENT TO DESIGN OF PROJECT:

N/A

PROJECT IDENTIFICATION

FINANCIAL PROJECT ID 432100-1-22-01 FEDERAL AID PROJECT NO. N/A COUNTY NAME SEMINOLE

SECTION NO. 77160 ROAD DESIGNATION SR 400 (I-4) LIMITS/MILEPOST MP 4.050 - 14.135

PROJECT DESCRIPTION WIDENING SR 400 (I-4) FROM WEST OF CR 532 TO WEST OF SR 435 KIRKMAN ROAD AND FROM 1 MILE EAST OF SR 434 TO 1/2 MILE EAST OF SR 472.

PROPOSED STRUCTURE TYPICAL SECTION

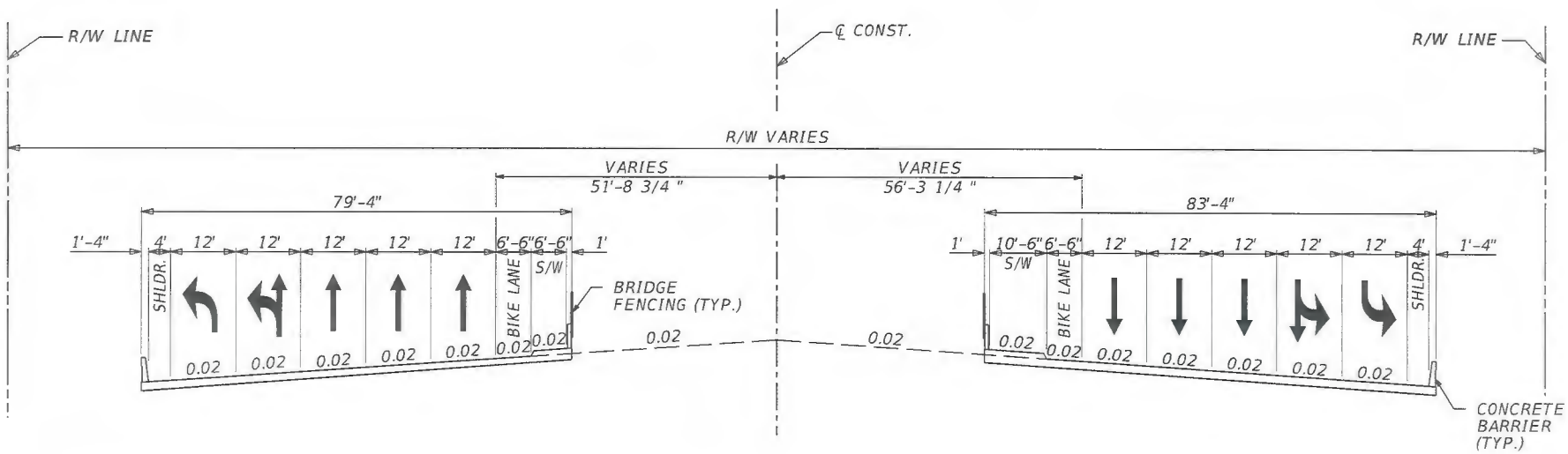

DESIGN SPEED = 30 MPH
CR 46A BRIDGE SECTION
DIVERGING DIAMOND INTERCHANGE

SHEET 3-28

APPROVED BY	FDOT CONCURRENCE	FHWA CONCURRENCE	COUNTY CONCURRENCE
ROBERT M. DENNEY, P.E. Date Engineer of Record 58593	ANNETTE K. BRENNAN, P.E. FDOT District Design Engineer 3/17/17 Date	FHWA Transportation Engineer 7/25/17 Date	County Engineer 06-05-17 Date

HNTB CORPORATION
610 CRESCENT EXEC. CT.
SUITE 400
LAKE MARY, FL 32746
(407) 805-0355
CERT OF AUTH NO 6500

ROBERT M. DENNEY LICENSE No. 58593 STATE OF FLORIDA PROFESSIONAL ENGINEER

mbacal 2/9/2017 2:39:46 PM \\LKMw00\pmwork3\Jobs\59219 - I4 SAMR\TECHPROD\Typical Section Package\TYPDRD01-SEG-3.DGN

PROJECT IDENTIFICATION

FINANCIAL PROJECT ID 432100-1-22-01 FEDERAL AID PROJECT NO. N/A COUNTY NAME SEMINOLE

SECTION NO. 77160 ROAD DESIGNATION SR 400 (I-4) LIMITS/MILEPOST MP 4.050 - 14.135

PROJECT DESCRIPTION WIDENING SR 400 (I-4) FROM WEST OF CR 532 TO WEST OF SR 435 KIRKMAN ROAD AND FROM 1 MILE EAST OF SR 434 TO 1/2 MILE EAST OF SR 472.

PROPOSED ROADWAY TYPICAL SECTION

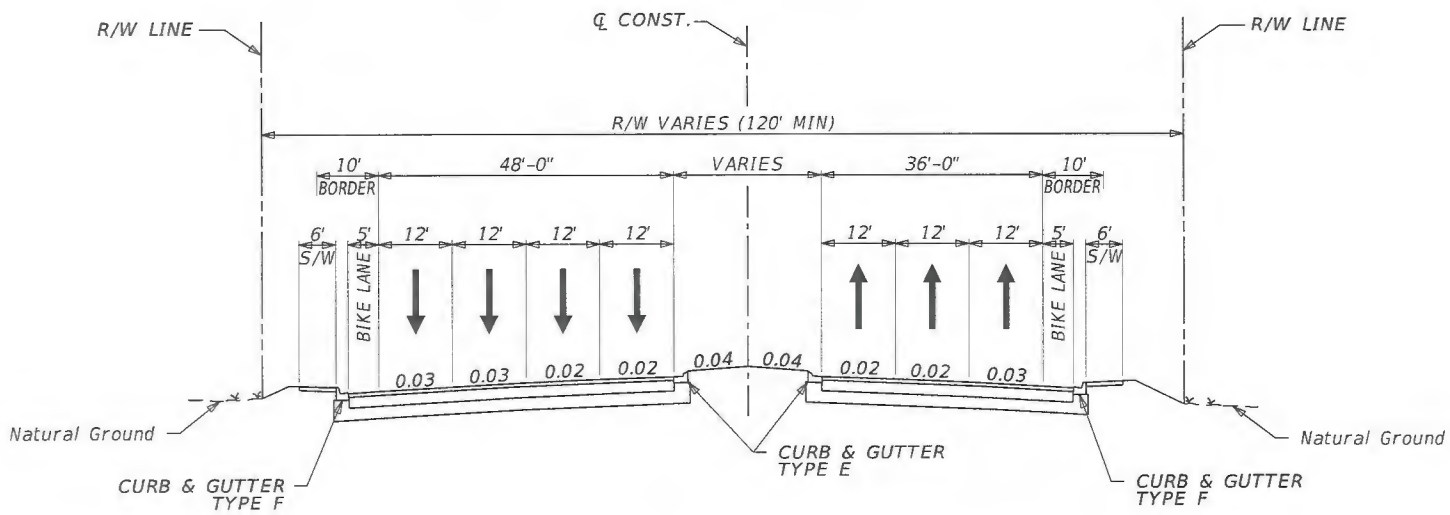

DESIGN SPEED = 30 MPH
CR 46A ROADWAY SECTION

SHEET 3-29

APPROVED BY	FDOT CONCURRENCE	FHWA CONCURRENCE	COUNTY CONCURRENCE
ROBERT M. DENNEY, P.E. Engineer Of Record 58593 — Date 2/9/17	ANNETTE K. BRENNAN, P.E. FDOT District Design Engineer — Date 3/17/17	FHWA Transportation Engineer — Date 7/25/17	County Engineer — Date 06-05-17

HNTB CORPORATION
610 CRESCENT EXEC. CT.
SUITE 400
LAKE MARY, FL 32746
(407) 805-0355
CERT OF AUTH NO 6500

ROBERT M. DENNEY LICENSE No. 58593 STATE OF FLORIDA PROFESSIONAL ENGINEER

PROJECT IDENTIFICATION

FINANCIAL PROJECT ID 432100-1-22-01 FEDERAL AID PROJECT NO. N/A COUNTY NAME SEMINOLE

SECTION NO. 77160 ROAD DESIGNATION SR 400 (I-4) LIMITS/MILEPOST MP 4.050 - 14.135

PROJECT DESCRIPTION WIDENING SR 400 (I-4) FROM WEST OF CR 532 TO WEST OF SR 435 KIRKMAN ROAD AND FROM 1 MILE EAST OF SR 434 TO 1/2 MILE EAST OF SR 472.

PROPOSED ROADWAY TYPICAL SECTION

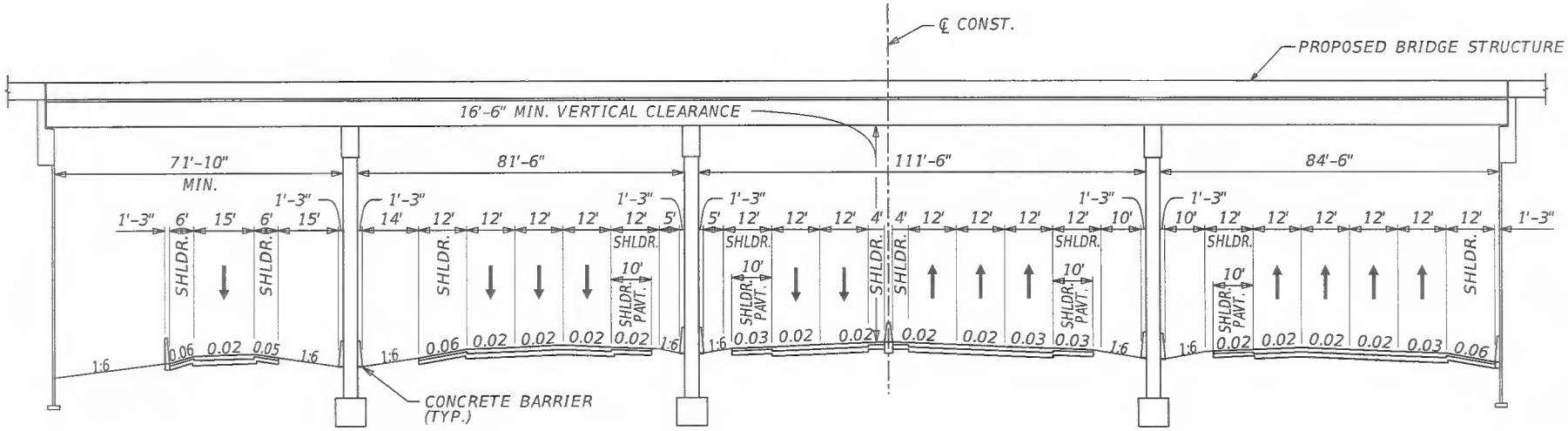

DESIGN SPEED = 70 MPH

SR 400 (I-4) UNDER CR 46A

SHEET 3-30

APPROVED BY	FDOT CONCURRENCE	FHWA CONCURRENCE
ROBERT M. DENNEY, P.E. Engineer Of Record 58593 — Date 2/9/17 HNTB CORPORATION 610 CRESCENT EXEC. CT. SUITE 400 LAKE MARY, FL 32746 (407) 805-0355 CERT OF AUTH NO 6500	ANNETTE K. BRENNAN, P.E. FDOT District Design Engineer Date 3/17/17	FHWA Transportation Engineer Date 7/25/17

ROBERT M. DENNEY LICENSE No. 58593 STATE OF FLORIDA PROFESSIONAL ENGINEER

PROJECT IDENTIFICATION

FINANCIAL PROJECT ID: 432100-1-22-01 COUNTY (SECTION): SEMINOLE (77160)

PROJECT DESCRIPTION: WIDENING SR 400 (I-4) FROM WEST OF CR 532 TO WEST OF SR 435 (KIRKMAN RD.) AND FROM 1 MILE EAST OF SR 434 TO 1/2 MILE EAST OF SR 472.

PROJECT CONTROLS (SR 46)

FUNCTIONAL CLASSIFICATION

( ) RURAL
(X) URBAN

( ) FREEWAY/EXPWY. ( ) MAJOR COLL.
(X) PRINCIPAL ART. ( ) MINOR COLL.
( ) MINOR ART. ( ) LOCAL

HIGHWAY SYSTEM

Yes	No	
(X)	( )	NATIONAL HIGHWAY SYSTEM
( )	(X)	FLORIDA INTRASTATE HIGHWAY SYSTEM
( )	(X)	STRATEGIC INTERMODAL SYSTEM
(X)	( )	STATE HIGHWAY SYSTEM
( )	(X)	OFF STATE HIGHWAY SYSTEM

ACCESS CLASSIFICATION

( ) 1 - FREEWAY
( ) 2 - RESTRICTIVE w/Service Roads
(X) 3 - RESTRICTIVE w/660 ft. Connection Spacing
( ) 4 - NON-RESTRICTIVE w/2640 ft. Signal Spacing
( ) 5 - RESTRICTIVE w/440 ft. Connection Spacing
( ) 6 - NON-RESTRICTIVE w/1320 ft. Signal Spacing
( ) 7 - BOTH MEDIAN TYPES

TRAFFIC

	YEAR	AADT
OPENING	2020	42,000
INTERIM	2030	48,000
DESIGN	2040	55,000

DESIGN SPEED 45 MPH
POSTED SPEED 45 MPH

DISTRIBUTION

K	9.0
D	53.10
T_{24}	9.5%

CRITERIA

(X) NEW CONSTRUCTION / RECONSTRUCTION
( ) RRR INTERSTATE / FREEWAY
( ) RRR NON-INTERSTATE / FREEWAY
( ) TDLC / NEW CONSTRUCTION / RECONSTRUCTION
( ) TDLC / RRR
( ) MANUAL OF UNIFORM MINIMUM STANDARDS (FLORIDA GREENBOOK) (OFF-STATE HIGHWAY SYSTEM ONLY)

DESIGN SPEED APPROVALS

A K Brennan — 3/17/17
DISTRICT DESIGN ENGINEER — DATE

James Stroz Jr — 4/10/17
DISTRICT TRAFFIC OPERATIONS ENGINEER — DATE

LIST ANY POTENTIAL EXCEPTIONS AND VARIATIONS RELATED TO TYPICAL SECTION ELEMENTS:

N/A

LIST MAJOR STRUCTURES LOCATION/DESCRIPTION - REQUIRING INDEPENDENT STRUCTURE DESIGN:

SR 46 (770084, 770085)

LIST MAJOR UTILITIES WITHIN PROJECT CORRIDOR:

GAS (CENTRAL FLORIDA GAS)
WATER (SEMINOLE COUNTY UTILITIES)
COMMUNICATIONS (BRIGHTHOUSE NETWORKS, COMCAST, LEVEL 3, VERIZON)
WASTEWATER (SEMINOLE COUNTY UTILITIES)
ELECTRIC (DUKE ENERGY DISTRIBUTION, DUKE ENERGY TRANSMISSION)

LIST OTHER INFORMATION PERTINENT TO DESIGN OF PROJECT:

N/A

PROJECT IDENTIFICATION

FINANCIAL PROJECT ID 432100-1-22-01 FEDERAL AID PROJECT NO. N/A COUNTY NAME SEMINOLE

SECTION NO. 77160 ROAD DESIGNATION SR 400 (I-4) LIMITS/MILEPOST MP 4.050 - 14.135

PROJECT DESCRIPTION WIDENING SR 400 (I-4) FROM WEST OF CR 532 TO WEST OF SR 435 KIRKMAN ROAD AND FROM 1 MILE EAST OF SR 434 TO 1/2 MILE EAST OF SR 472.

PROPOSED ROADWAY TYPICAL SECTION

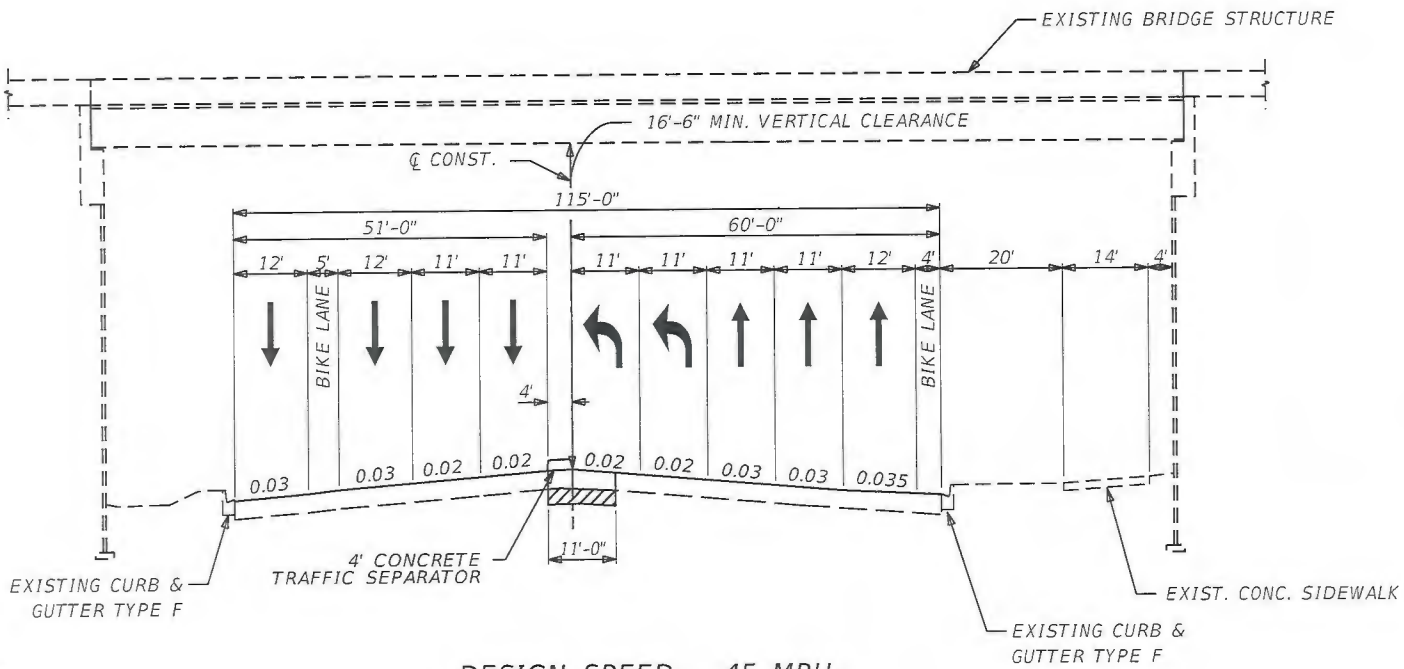

DESIGN SPEED = 45 MPH

SR 46 UNDER SR 400 (I-4)

SHEET 3-32

APPROVED BY	FDOT CONCURRENCE	FHWA CONCURRENCE
7/10/17 Date	Mario Bizzo P.E. 6/9/17	7/25/17
ROBERT M. DENNEY, P.E. Engineer Of Record 58593	~~ANNETTE K. BRENNAN, P.E.~~ FDOT District Design Engineer Date	FHWA Transportation Engineer Date
HNTB CORPORATION 610 CRESCENT EXEC. CT. SUITE 400 LAKE MARY, FL 32746 (407) 805-0355 CERT OF AUTH NO 6500		

ROBERT M. DENNEY LICENSE No. 58593 STATE OF FLORIDA PROFESSIONAL ENGINEER

PROJECT IDENTIFICATION

FINANCIAL PROJECT ID 432100-1-22-01 FEDERAL AID PROJECT NO. N/A COUNTY NAME SEMINOLE

SECTION NO. 77160 ROAD DESIGNATION SR 400 (I-4) LIMITS/MILEPOST MP 4.050 - 14.135

PROJECT DESCRIPTION WIDENING SR 400 (I-4) FROM WEST OF CR 532 TO WEST OF SR 435 KIRKMAN ROAD AND FROM 1 MILE EAST OF SR 434 TO 1/2 MILE EAST OF SR 472.

PROPOSED ROADWAY TYPICAL SECTION

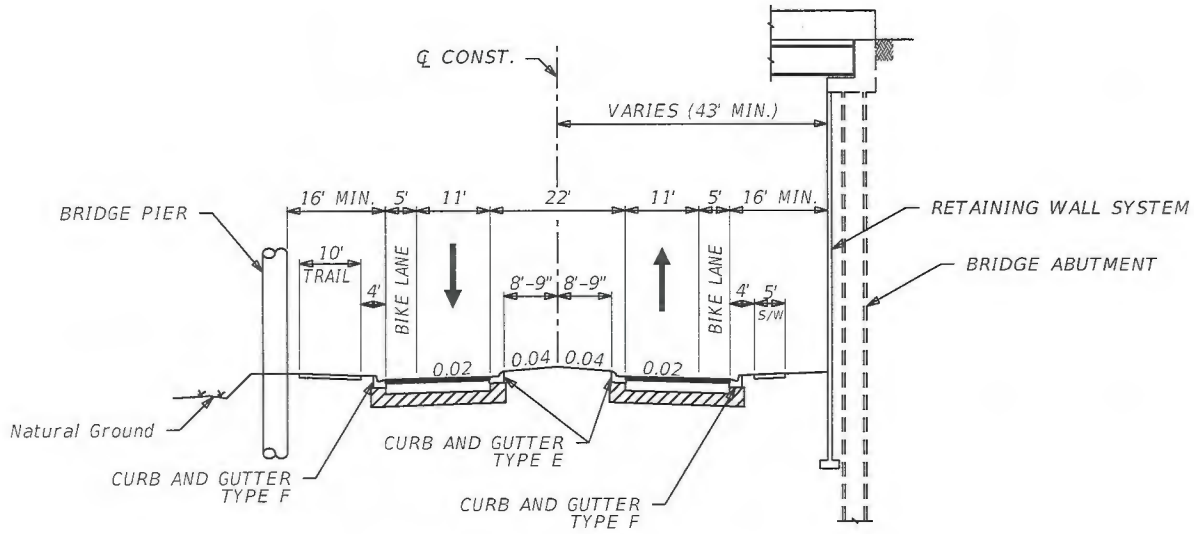

DESIGN SPEED = 35 MPH

CR 431 (ORANGE BOULEVARD) ROADWAY SECTION (WEST OF MONROE RD.)

SHEET 3-33A

APPROVED BY	FDOT CONCURRENCE	FHWA CONCURRENCE	COUNTY CONCURRENCE
ROBERT M. DENNEY, P.E. Date Engineer Of Record 58593	MARIO BIZZIO, P.E. FDOT District Design Engineer 6/2/17 Date	FHWA Transportation Engineer 7/25/17 Date	County Engineer 06-05-17 Date

HNTB CORPORATION
610 CRESCENT EXEC. CT.
SUITE 400
LAKE MARY, FL 32746
(407) 805-0355
CERT OF AUTH NO 6500

ROBERT M. DENNEY LICENSE No. 58593 STATE OF FLORIDA PROFESSIONAL ENGINEER

amourad 6/1/2017 12:47:04 PM \\LKMw00\pmwork3\Jobs\59219 - I4 SAMR\TECHPROD\Typical Section Package\TYPDRD01-SEG-3.DGN

PROJECT IDENTIFICATION

FINANCIAL PROJECT ID 432100-1-22-01 FEDERAL AID PROJECT NO. N/A COUNTY NAME SEMINOLE

SECTION NO. 77160 ROAD DESIGNATION SR 400 (I-4) LIMITS/MILEPOST MP 4.050 - 14.135

PROJECT DESCRIPTION WIDENING SR 400 (I-4) FROM WEST OF CR 532 TO WEST OF SR 435 KIRKMAN ROAD AND FROM 1 MILE EAST OF SR 434 TO 1/2 MILE EAST OF SR 472.

PROPOSED ROADWAY TYPICAL SECTION

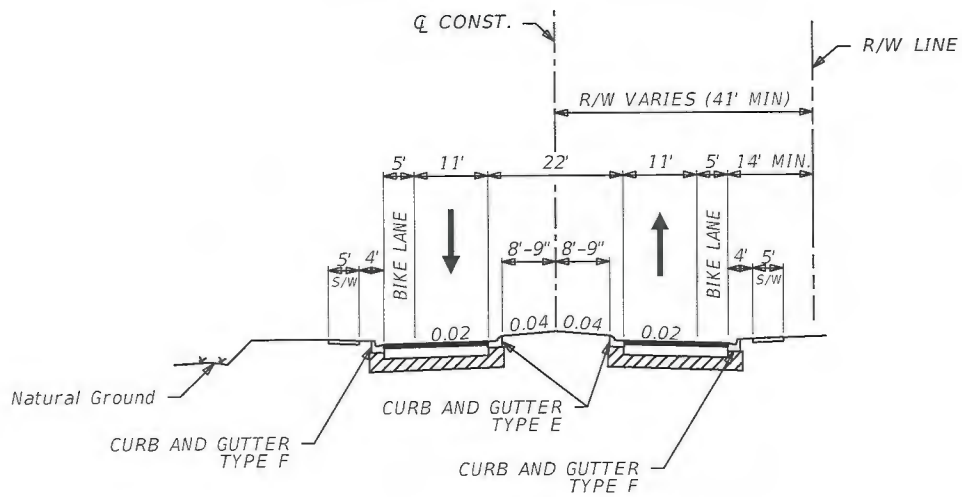

DESIGN SPEED = 35 MPH

CR 431 (ORANGE BOULEVARD) ROADWAY SECTION (EAST OF MONROE RD.)

SHEET 3-33B

APPROVED BY	FDOT CONCURRENCE	FHWA CONCURRENCE	COUNTY CONCURRENCE
ROBERT M. DENNEY, P.E. Engineer of Record 58593 Date	MARIO BIZZIO, P.E. FDOT District Design Engineer 6/2/17 Date	FHWA Transportation Engineer 7/25/17 Date	County Engineer 06-05-17 Date

ROBERT M. DENNEY LICENSE No. 58593 STATE OF FLORIDA PROFESSIONAL ENGINEER

HNTB CORPORATION
610 CRESCENT EXEC. CT.
SUITE 400
LAKE MARY, FL 32746
(407) 805-0355
CERT OF AUTH NO 6500

amourad 6/1/2017 12:47:05 PM \\LKMw00\pmwork3\Jobs\59219 - I4 SAMR\TECHPROD\Typical Section Package\TYPDRD01-SEG-3.DGN

PROJECT IDENTIFICATION

FINANCIAL PROJECT ID: 432100-1-22-01 COUNTY (SECTION): SEMINOLE (77160)

PROJECT DESCRIPTION: WIDENING SR 400 (I-4) FROM WEST OF CR 532 TO WEST OF SR 435 (KIRKMAN RD.) AND FROM 1 MILE EAST OF SR 434 TO 1/2 MILE EAST OF SR 472.

PROJECT CONTROLS (US 17/92)

FUNCTIONAL CLASSIFICATION

( ) RURAL
(X) URBAN

( ) FREEWAY/EXPWY. ( ) MAJOR COLL.
(X) PRINCIPAL ART. ( ) MINOR COLL.
( ) MINOR ART. ( ) LOCAL

HIGHWAY SYSTEM

Yes	No	
(X)	( )	NATIONAL HIGHWAY SYSTEM
( )	(X)	FLORIDA INTRASTATE HIGHWAY SYSTEM
(X)	( )	STRATEGIC INTERMODAL SYSTEM
(X)	( )	STATE HIGHWAY SYSTEM
( )	(X)	OFF STATE HIGHWAY SYSTEM

ACCESS CLASSIFICATION

( ) 1 - FREEWAY
( ) 2 - RESTRICTIVE w/Service Roads
(X) 3 - RESTRICTIVE w/660 ft. Connection Spacing
( ) 4 - NON-RESTRICTIVE w/2640 ft. Signal Spacing
( ) 5 - RESTRICTIVE w/440 ft. Connection Spacing
( ) 6 - NON-RESTRICTIVE w/1320 ft. Signal Spacing
( ) 7 - BOTH MEDIAN TYPES

TRAFFIC

	YEAR	AADT
OPENING	2020	29,000
INTERIM	2030	35,000
DESIGN	2040	41,000

DESIGN SPEED 35 MPH
POSTED SPEED 35 MPH

DISTRIBUTION
K 9.0
D 53.10
T_{24} 9.2%

CRITERIA

(X) NEW CONSTRUCTION / RECONSTRUCTION
( ) RRR INTERSTATE / FREEWAY
( ) RRR NON-INTERSTATE / FREEWAY
( ) TDLC / NEW CONSTRUCTION / RECONSTRUCTION
( ) TDLC / RRR
( ) MANUAL OF UNIFORM MINIMUM STANDARDS (FLORIDA GREENBOOK) (OFF-STATE HIGHWAY SYSTEM ONLY)

DESIGN SPEED APPROVALS

AK Brennan 3/17/17
DISTRICT DESIGN ENGINEER DATE

4/10/17
DISTRICT TRAFFIC OPERATIONS ENGINEER DATE

LIST ANY POTENTIAL EXCEPTIONS AND VARIATIONS RELATED TO TYPICAL SECTION ELEMENTS:

N/A

LIST MAJOR STRUCTURES LOCATION/DESCRIPTION - REQUIRING INDEPENDENT STRUCTURE DESIGN:

US 17-92 (PROPOSED)

LIST MAJOR UTILITIES WITHIN PROJECT CORRIDOR:
GAS (CENTRAL FLORIDA GAS)
WATER (SEMINOLE COUNTY UTILITIES, VOLUSIA COUNTY UTILITIES)
COMMUNICATIONS (BRIGHTHOUSE NETWORKS, COMCAST, LEVEL 3, VERIZON)
WASTEWATER (SEMINOLE COUNTY UTILITIES, VOLUSIA COUNTY UTILITIES)
ELECTRIC (DUKE ENERGY DISTRIBUTION, DUKE ENERGY TRANSMISSION)

LIST OTHER INFORMATION PERTINENT TO DESIGN OF PROJECT:

N/A

PROJECT IDENTIFICATION

FINANCIAL PROJECT ID 432100-1-22-01 FEDERAL AID PROJECT NO. N/A COUNTY NAME SEMINOLE

SECTION NO. 77160 ROAD DESIGNATION SR 400 (I-4) LIMITS/MILEPOST MP 4.050 - 14.135

PROJECT DESCRIPTION WIDENING SR 400 (I-4) FROM WEST OF CR 532 TO WEST OF SR 435 KIRKMAN ROAD AND FROM 1 MILE EAST OF SR 434 TO 1/2 MILE EAST OF SR 472.

PROPOSED STRUCTURE TYPICAL SECTION

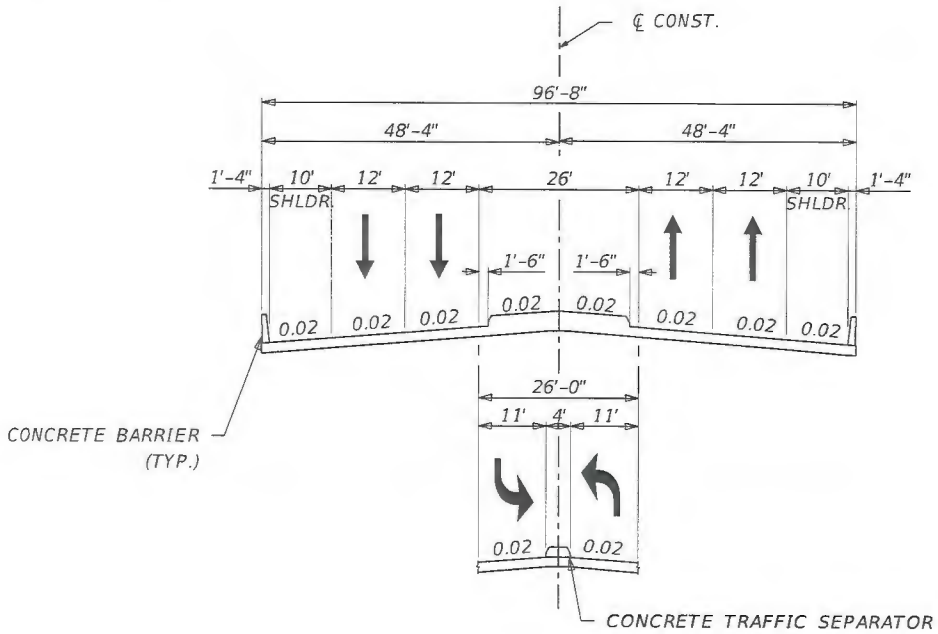

DESIGN SPEED = 45 MPH

US 17/92 BRIDGE SECTION

SHEET 3-35

APPROVED BY	FDOT CONCURRENCE	FHWA CONCURRENCE
ROBERT M. DENNEY, P.E. Date Engineer of Record 58593	ANNETTE K. BRENNAN, P.E. FDOT District Design Engineer Date 3/17/17	FHWA Transportation Engineer Date 7/25/17

HNTB CORPORATION
610 CRESCENT EXEC. CT.
SUITE 400
LAKE MARY, FL 32746
(407) 805-0355
CERT OF AUTH NO 6500

ROBERT M. DENNEY LICENSE No. 58593 STATE OF FLORIDA PROFESSIONAL ENGINEER

mbacal 2/8/2017 2:39:50 PM \\LKMw00\pmwork3\Jobs\59219 - I4 SAMR\TECHPROD\Typical Section Package\TYPDRD01-SEG-3.DGN

PROJECT IDENTIFICATION

FINANCIAL PROJECT ID 432100-1-22-01 FEDERAL AID PROJECT NO. N/A COUNTY NAME SEMINOLE

SECTION NO. 77160 ROAD DESIGNATION SR 400 (I-4) LIMITS/MILEPOST MP 4.050 - 14.135

PROJECT DESCRIPTION WIDENING SR 400 (I-4) FROM WEST OF CR 532 TO WEST OF SR 435 KIRKMAN ROAD AND FROM 1 MILE EAST OF SR 434 TO 1/2 MILE EAST OF SR 472.

PROPOSED ROADWAY TYPICAL SECTION

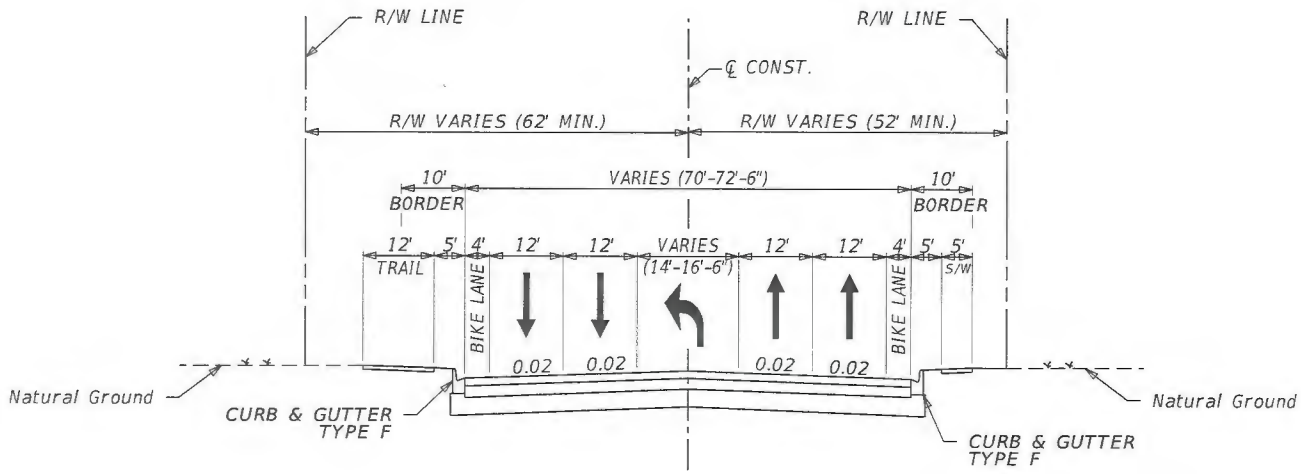

DESIGN SPEED = 35 MPH

US 17/92 (CR 15, MONROE ROAD) ROADWAY SECTION

SHEET 3-36

APPROVED BY	FDOT CONCURRENCE	FHWA CONCURRENCE
STATE OF FLORIDA ROBERT M. DENNEY, P.E. Date Engineer of Record 58593 HNTB CORPORATION 610 CRESCENT EXEC. CT. SUITE 400 LAKE MARY, FL 32746 (407) 805-0355 CERT OF AUTH NO 6500	ANNETTE K. BRENNAN, P.E. FDOT District Design Engineer Date 3/17/17	FHWA Transportation Engineer Date 7/25/17

ROBERT M. DENNEY LICENSE No. 58593 STATE OF FLORIDA PROFESSIONAL ENGINEER

mbacal 2/6/2017 2:39:50 PM \\LKMw00\pmwork3\Jobs\59219 - I4 SAMR\TECHPROD\Typical Section Package\TYPDRD01-SEG-3.DGN

PROJECT IDENTIFICATION

FINANCIAL PROJECT ID 432100-1-22-01 FEDERAL AID PROJECT NO. N/A COUNTY NAME SEMINOLE

SECTION NO. 77160 ROAD DESIGNATION SR 400 (I-4) LIMITS/MILEPOST MP 4.050 - 14.135

PROJECT DESCRIPTION WIDENING SR 400 (I-4) FROM WEST OF CR 532 TO WEST OF SR 435 KIRKMAN ROAD AND FROM 1 MILE EAST OF SR 434 TO 1/2 MILE EAST OF SR 472.

PROPOSED STRUCTURE TYPICAL SECTION

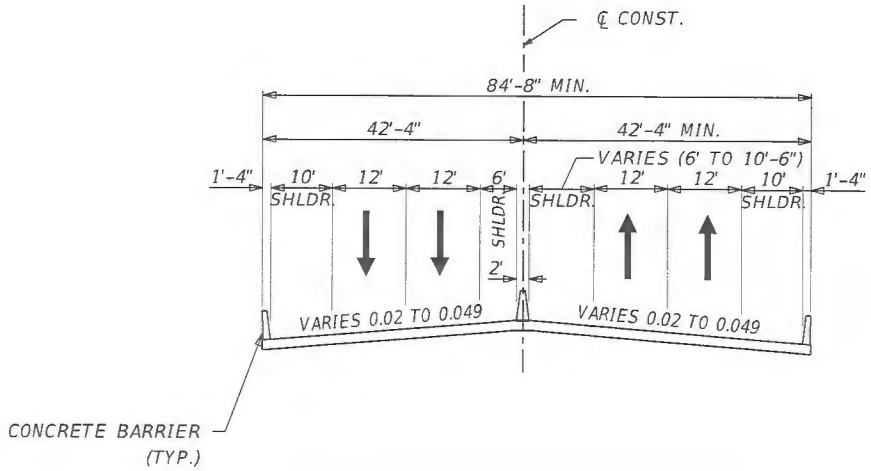

DESIGN SPEED = 45 MPH
US 17/92 BRIDGE SECTION
(TIE-TO EXISTING BRIDGE OVER ST. JOHNS RIVER)

SHEET 3-37

APPROVED BY	FDOT CONCURRENCE	FHWA CONCURRENCE
ROBERT M. DENNEY, P.E. Date Engineer of Record 58593	ANNETTE K. BRENNAN, P.E. FDOT District Design Engineer Date 3/17/17	FHWA Transportation Engineer Date 7/25/17

ROBERT M. DENNEY LICENSE No. 58593 STATE OF FLORIDA PROFESSIONAL ENGINEER

HNTB CORPORATION
610 CRESCENT EXEC. CT.
SUITE 400
LAKE MARY, FL 32746
(407) 805-0355
CERT OF AUTH NO 6500

PROJECT IDENTIFICATION

FINANCIAL PROJECT ID 432100-1-22-01 FEDERAL AID PROJECT NO. N/A COUNTY NAME SEMINOLE

SECTION NO. 77160 ROAD DESIGNATION SR 400 (I-4) LIMITS/MILEPOST MP 4.050 - 14.135

PROJECT DESCRIPTION WIDENING SR 400 (I-4) FROM WEST OF CR 532 TO WEST OF SR 435 KIRKMAN ROAD AND FROM 1 MILE EAST OF SR 434 TO 1/2 MILE EAST OF SR 472.

PROPOSED ROADWAY TYPICAL SECTION

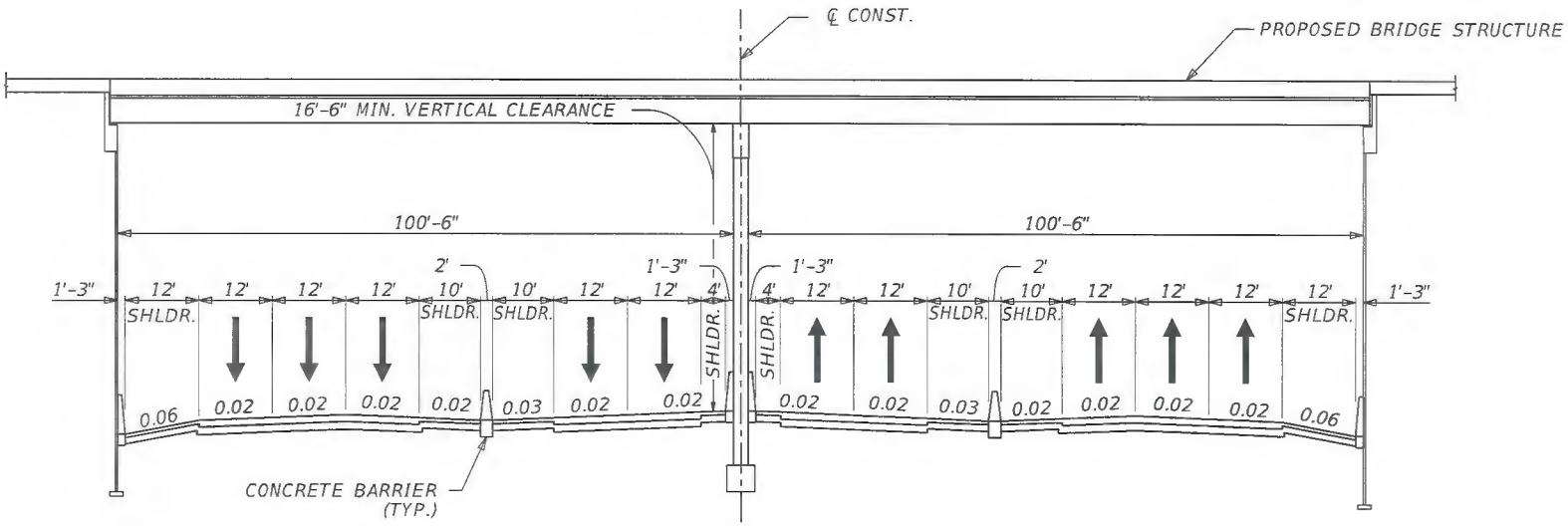

DESIGN SPEED = 70 MPH
SR 400 (I-4) UNDER US 17/92

SHEET 3-38

APPROVED BY	FDOT CONCURRENCE	FHWA CONCURRENCE
ROBERT M. DENNEY, P.E. Date Engineer Of Record 58593 HNTB CORPORATION 610 CRESCENT EXEC. CT. SUITE 400 LAKE MARY, FL 32746 (407) 805-0355 CERT OF AUTH NO 6500	ANNETTE K. BRENNAN, P.E. FDOT District Design Engineer 3/17/17 Date	FHWA Transportation Engineer 7/25/17 Date

ROBERT M. DENNEY LICENSE No. 58593 STATE OF FLORIDA PROFESSIONAL ENGINEER

mbacal 2/9/2017 2:39:51 PM \\LKMw00\pmwork3\Jobs\59219 - I4 SAMR\TECHPROD\Typical Section Package\TYPDRD01-SEG-3.DGN

PROJECT IDENTIFICATION

FINANCIAL PROJECT ID 432100-1-22-01 FEDERAL AID PROJECT NO. N/A COUNTY NAME SEMINOLE

SECTION NO. 77160 ROAD DESIGNATION SR 400 (I-4) LIMITS/MILEPOST MP 4.050 - 14.135

PROJECT DESCRIPTION WIDENING SR 400 (I-4) FROM WEST OF CR 532 TO WEST OF SR 435 KIRKMAN ROAD AND FROM 1 MILE EAST OF SR 434 TO 1/2 MILE EAST OF SR 472.

PROPOSED ROADWAY TYPICAL SECTION

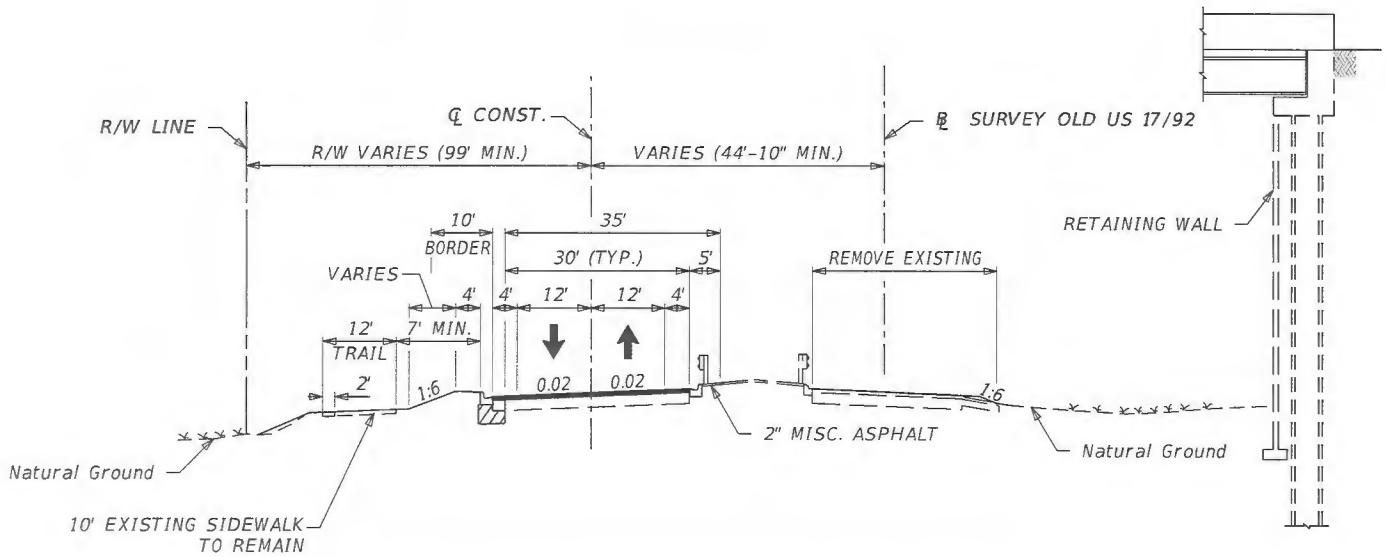

DESIGN SPEED = 30 MPH

OLD US 17/92 ROADWAY SECTION UNDER SR 400 (I-4)

SHEET 3-39

APPROVED BY	FDOT CONCURRENCE	FHWA CONCURRENCE
ROBERT M. DENNEY, P.E. Engineer of Record 58593 — Date 2/9/17	ANNETTE K. BRENNAN, P.E. FDOT District Design Engineer — Date 3/17/17	FHWA Transportation Engineer — Date 7/25/17

ROBERT M. DENNEY LICENSE No. 58593 STATE OF FLORIDA PROFESSIONAL ENGINEER

HNTB CORPORATION
610 CRESCENT EXEC. CT.
SUITE 400
LAKE MARY, FL 32746
(407) 805-0355
CERT OF AUTH NO 6500

mbacal 2/9/2017 2:39:52 PM \\LKMw00\pmwork3\Jobs\59219 - I4 SAMR\TECHPROD\Typical Section Package\TYPDRD01-SEG-3.DGN

I-4 Beyond the Ultimate

Volusia County Typical Section Package Index

PD&E FPID: 432100-1 (Segment 4)
Design FPID: 408464-2

I-4 Mainline

4-1 Key Sheet
4-2 I-4 Project Controls
4-3 I-4 typical Section with Transit Corridor & 2 Express Lanes
4-4 I-4 typical Section with Transit Corridor & 1 Express Lane
4-5 I-4 typical Section with Transit Corridor & No Express Lane
4-6 I-4 Bridge Over St. Johns River (Widen)
4-7 I-4 Bridge on the Debary Causeway (New Bridge)
4-8 I-4 Bridge Over Padgett Creek (Replace)
4-9 I-4 Bridge Over Dirksen Drive/Debary Avenue (Replace)

Ramps

4-10 One Lane Ramp
4-11 One Lane Express Lane Ramp
4-12 Two Lane Ramp
4-13 Three Lane Ramp

Dirksen Drive

4-14 Dirksen Drive Project Controls
4-15 Dirksen Drive Under I-4 Roadway Section
4-16 Dirksen Drive Roadway Section (West of I-4)
4-17 Dirksen Drive Roadway Section (East of I-4)

Enterprise Road

4-18 Enterprise Road Project Controls
4-19 Enterprise Road Bridge Section
4-20 Enterprise Road Roadway Section
4-21 I-4 Under Enterprise Road

Saxon Boulevard

4-22 Saxon Blvd Project Controls (West of I-4)
4-23 Saxon Blvd Project Controls (East of I-4)
4-24 Saxon Blvd Bridge Section (Replace)
4-25 Saxon Blvd Roadway Section (West of I-4)
4-26 Saxon Blvd Roadway Section (East of I-4)
4-27 Saxon Blvd Roadway Section (East of Normandy Blvd)
4-28 I-4 Under Saxon Boulevard

I-4 Beyond the Ultimate

Volusia County Typical Section Package Index

PD&E FPID: 432100-1 (Segment 4)
Design FPID: 408464-2

Rhode Island Avenue

4-29 Rhode Island Avenue Project Controls
4-30 Rhode Island Bridge Section (New Bridge)
4-31 Rhode Island Roadway Section
4-32 I-4 Under Rhode Island Avenue

Graves Avenue

4-33 I-4 Under Graves Avenue

SR 472

4-34 SR 472 Project Controls (West of I-4)
4-35 SR 472 Project Controls (East of I-4)
4-36 Howland Boulevard Project Controls (East of I-4)
4-37 SR 472 Bridge Section (Replace)
4-38 SR 472 Roadway Section (West of I-4)
4-39 SR 472 Roadway Section (East of I-4)
4-40 Howland Boulevard Roadway Section (East of Graves Ave)
4-41 I-4 Under SR 472

STATE OF FLORIDA

DEPARTMENT OF TRANSPORTATION

FINANCIAL PROJECT ID 432100-1-22-01
(FEDERAL FUNDS)

VOLUSIA COUNTY (79110)

STATE ROAD NO. 400 (I-4)
I-4 BEYOND THE ULTIMATE
TYPICAL SECTION PACKAGE

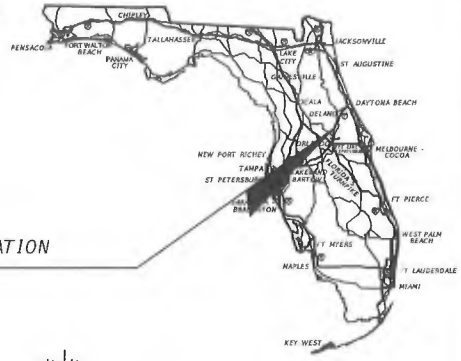

PROJECT LOCATION

N

0 3 6
Miles

END PROJECT
END SEGMETN 4
℄ EXIST. SR 400
STA. 3118+46.00
MP 10.227 (VOLUSIA CO.)

BEGIN SEGMENT 4
℄ EXIST. SR 400
STA. 2583+00.00
MP 0.086 (VOLUSIA CO.)

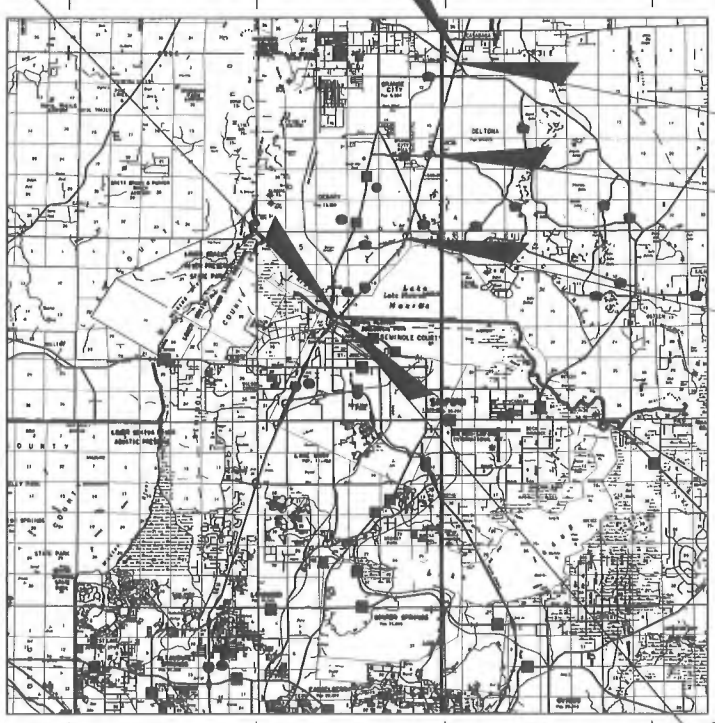

SR 472

SAXON BLVD.

DIRKSEN DR.

SEMINOLE / VOLUSIA CO. DIVIDE
MP 14.135 / 0.000

PROJECT LENGTH IS BASED ON ℄ OF CONSTRUCTION

LENGTH OF PROJECT		
	LINEAR FEET	MILES
ROADWAY	50925.53	9.645
BRIDGES	2618.95	0.496
NET LENGTH OF PROJECT	53544.48	10.141
EXCEPTIONS	--	--
GROSS LENGTH OF PROJECT	53544.48	10.141

FDOT PROJECT MANAGER: BEATA STYŚ-PALASZ, PE

SHEET 4-1

PROJECT IDENTIFICATION

FINANCIAL PROJECT ID: 432100-1-22-01 COUNTY (SECTION): VOLUSIA (79110)

PROJECT DESCRIPTION: WIDENING SR 400 (I-4) FROM WEST OF CR 532 TO WEST OF SR 435 (KIRKMAN RD.) AND FROM 1 MILE EAST OF SR 434 TO 1/2 MILE EAST OF SR 472.

PROJECT CONTROLS (SR 400/I-4)

FUNCTIONAL CLASSIFICATION

( ) RURAL
(X) URBAN

( ) FREEWAY/EXPWY. ( ) MAJOR COLL.
(X) PRINCIPAL ART. ( ) MINOR COLL.
( ) MINOR ART. ( ) LOCAL

HIGHWAY SYSTEM

Yes	No	
(X)	( )	NATIONAL HIGHWAY SYSTEM
( )	(X)	FLORIDA INTRASTATE HIGHWAY SYSTEM
(X)	( )	STRATEGIC INTERMODAL SYSTEM
(X)	( )	STATE HIGHWAY SYSTEM
( )	(X)	OFF STATE HIGHWAY SYSTEM

ACCESS CLASSIFICATION

(X) 1 - FREEWAY
( ) 2 - RESTRICTIVE w/Service Roads
( ) 3 - RESTRICTIVE w/660 ft. Connection Spacing
( ) 4 - NON-RESTRICTIVE w/2640 ft. Signal Spacing
( ) 5 - RESTRICTIVE w/440 ft. Connection Spacing
( ) 6 - NON-RESTRICTIVE w/1320 ft. Signal Spacing
( ) 7 - BOTH MEDIAN TYPES

TRAFFIC

	YEAR	AADT
OPENING	2020	135,000
INTERIM	2030	162,000
DESIGN	2040	183,000

DESIGN SPEED 70 MPH
POSTED SPEED 70 MPH

DISTRIBUTION

K	9.0
D	54.30
T_{24}	12.1%

CRITERIA

(X) NEW CONSTRUCTION / RECONSTRUCTION
( ) RRR INTERSTATE / FREEWAY
( ) RRR NON-INTERSTATE / FREEWAY
( ) TDLC / NEW CONSTRUCTION / RECONSTRUCTION
( ) TDLC / RRR
( ) MANUAL OF UNIFORM MINIMUM STANDARDS (FLORIDA GREENBOOK) (OFF-STATE HIGHWAY SYSTEM ONLY)

DESIGN SPEED APPROVALS

A K Brennan — 3/17/17
DISTRICT DESIGN ENGINEER — DATE

4/10/17
DISTRICT TRAFFIC OPERATIONS ENGINEER — DATE

LIST ANY POTENTIAL EXCEPTIONS AND VARIATIONS RELATED TO TYPICAL SECTION ELEMENTS:

BORDER WIDTH (VARIATION) - FOR THE BORDER WIDTHS LESS THAN 94-FT (94-FT REQUIRED)
SHOULDER WIDTH (VARIATION) - FOR THE 10-FT MEDIAN GUL SHOULDER (12-FT REQUIRED)
SHOULDER WIDTH (VARIATION) - FOR THE 4-FT MEDIAN EXPRESS LANE SHOULDER (6-FT REQUIRED)

LIST MAJOR STRUCTURES LOCATION/DESCRIPTION - REQUIRING INDEPENDENT STRUCTURE DESIGN:

ST. JOHNS RIVER	(790196, 790197)
DEBARY CAUSEWAY	(PROPOSED)
PADGETT CREEK	(790941, 790099)
DIRKSEN DRIVE	(790042, 790100)
ENTERPRISE RD.	(790191)
SAXON BLVD.	(790167, 790166)
GRAVES AVE.	(790218)
RHODE ISLAND AVE.	(PROPOSED)
SR 472	(790053, 790190)

LIST MAJOR UTILITIES WITHIN PROJECT CORRIDOR:

GAS (CENTRAL FLORIDA GAS)
WATER (VOLUSIA COUNTY UTILITIES)
COMMUNICATIONS (BRIGHTHOUSE NETWORKS, COMCAST, LEVEL 3, VERIZON)
WASTEWATER (VOLUSIA COUNTY UTILITIES)
ELECTRIC (DUKE ENERGY DISTRIBUTION, DUKE ENERGY TRANSMISSION)

LIST OTHER INFORMATION PERTINENT TO DESIGN OF PROJECT:

N/A

SHEET 4-2

PROJECT IDENTIFICATION

FINANCIAL PROJECT ID 432100-1-22-01 FEDERAL AID PROJECT NO. N/A COUNTY NAME VOLUSIA

SECTION NO. 79110 ROAD DESIGNATION SR 400 (I-4) LIMITS/MILEPOST MP 0.000 - 10.227

PROJECT DESCRIPTION WIDENING SR 400 (I-4) FROM WEST OF CR 532 TO WEST OF SR 435 KIRKMAN ROAD AND FROM 1 MILE EAST OF SR 434 TO 1/2 MILE EAST OF SR 472.

PROPOSED ROADWAY TYPICAL SECTION

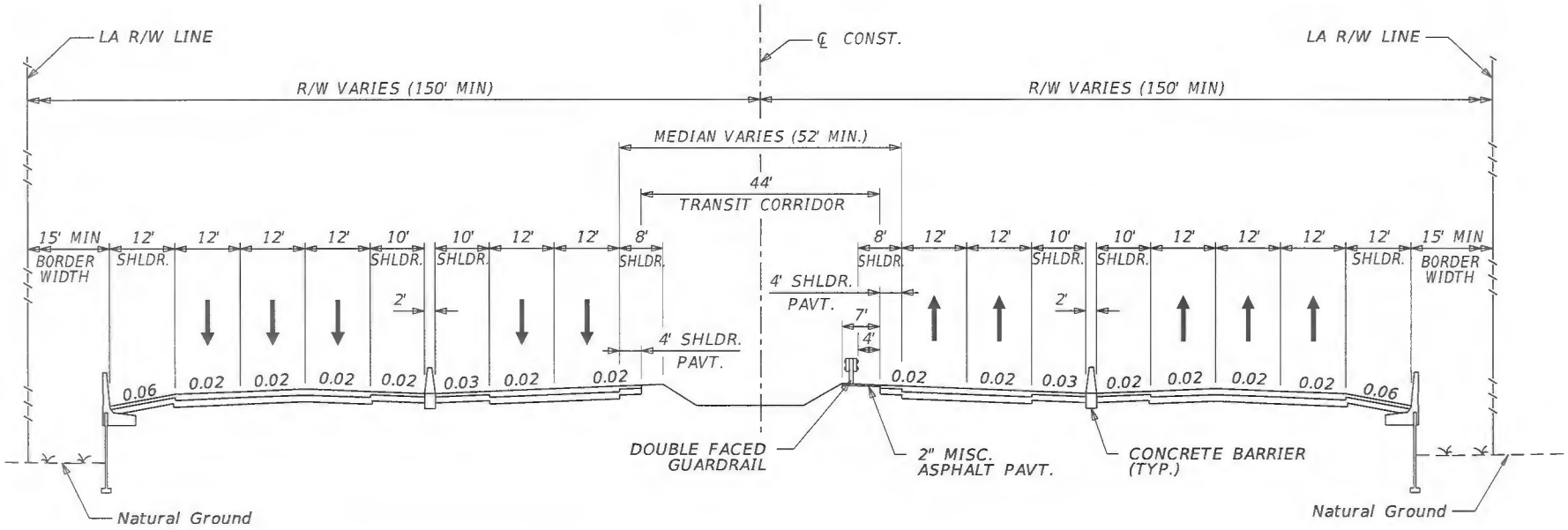

DESIGN SPEED = 70 MPH

SR 400 (I-4) WITH TRANSIT CORRIDOR & 2 EXPRESS LANES

STA 2578+48.33 TO 3118+46.00

SHEET 4-3

APPROVED BY	FDOT CONCURRENCE	FHWA CONCURRENCE
ROBERT M. DENNEY, P.E. Engineer Of Record 58593 — Date 2/17/17	ANNETTE K. BRENNAN, P.E. FDOT District Design Engineer — Date 3/17/17	FHWA Transportation Engineer — Date 7/25/17

HNTB CORPORATION
610 CRESCENT EXEC. CT.
SUITE 400
LAKE MARY, FL 32746
(407) 805-0355
CERT OF AUTH NO 6500

ROBERT M. DENNEY LICENSE No. 58593 STATE OF FLORIDA PROFESSIONAL ENGINEER

mbacal 2/16/2017 2:39:56 PM \\LKMw00\pmwork3\Jobs\59219 - I4 SAMR\TECHPROD\Typical Section Package\TYPDRD01-I-4 TYPICALS.DGN

PROJECT IDENTIFICATION

FINANCIAL PROJECT ID 432100-1-22-01 FEDERAL AID PROJECT NO. N/A COUNTY NAME VOLUSIA

SECTION NO. 79110 ROAD DESIGNATION SR 400 (I-4) LIMITS/MILEPOST MP 0.000 - 10.227

PROJECT DESCRIPTION WIDENING SR 400 (I-4) FROM WEST OF CR 532 TO WEST OF SR 435 KIRKMAN ROAD AND FROM 1 MILE EAST OF SR 434 TO 1/2 MILE EAST OF SR 472.

PROPOSED ROADWAY TYPICAL SECTION

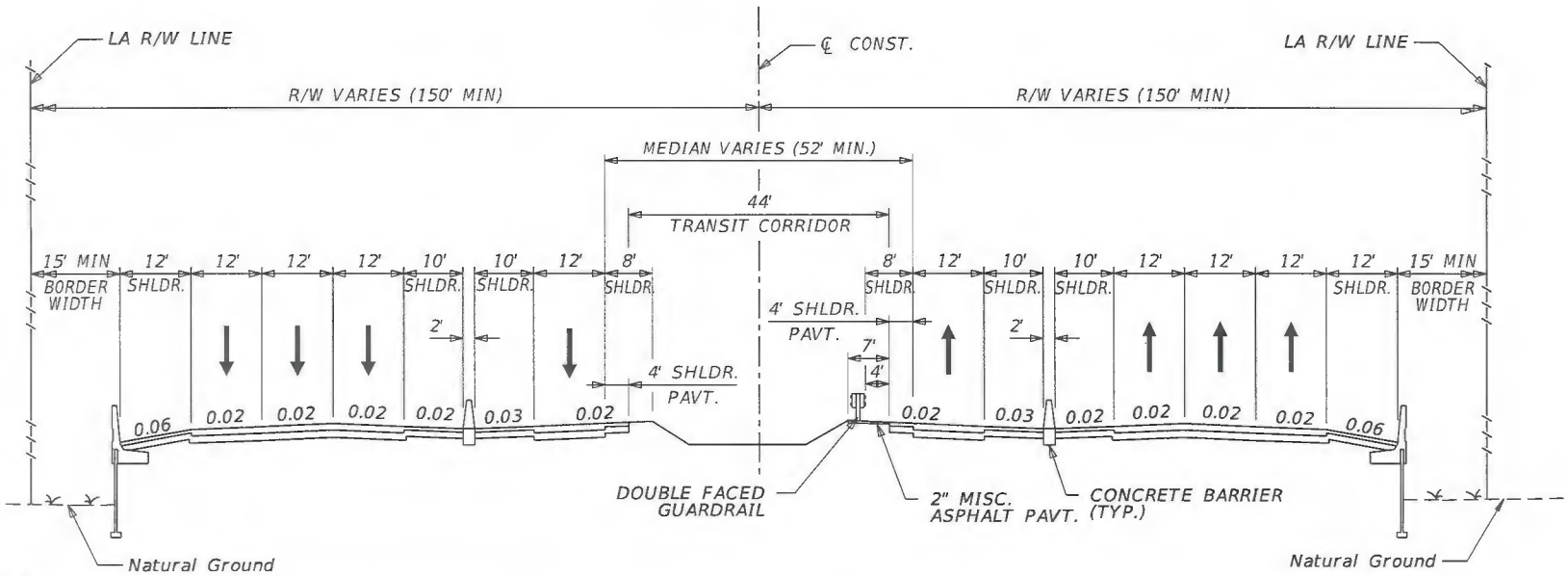

DESIGN SPEED = 70 MPH

SR 400 (I-4) WITH TRANSIT CORRIDOR & 1 EXPRESS LANE

STA 2578+48.33 TO 3090+91.24

SHEET 4-4

APPROVED BY	FDOT CONCURRENCE	FHWA CONCURRENCE
ROBERT M. DENNEY, P.E. Engineer Of Record 58593 — Date	ANNETTE K. BRENNAN, P.E. FDOT District Design Engineer — Date 3/17/17	FHWA Transportation Engineer — Date 7/25/17

HNTB CORPORATION
610 CRESCENT EXEC. CT.
SUITE 400
LAKE MARY, FL 32746
(407) 805-0355
CERT OF AUTH NO 6500

ROBERT M. DENNEY LICENSE No. 58593 STATE OF FLORIDA PROFESSIONAL ENGINEER

PROJECT IDENTIFICATION

FINANCIAL PROJECT ID 432100-1-22-01 FEDERAL AID PROJECT NO. N/A COUNTY NAME VOLUSIA

SECTION NO. 79110 ROAD DESIGNATION SR 400 (I-4) LIMITS/MILEPOST MP 0.000 - 10.227

PROJECT DESCRIPTION WIDENING SR 400 (I-4) FROM WEST OF CR 532 TO WEST OF SR 435 KIRKMAN ROAD AND FROM 1 MILE EAST OF SR 434 TO 1/2 MILE EAST OF SR 472.

PROPOSED ROADWAY TYPICAL SECTION

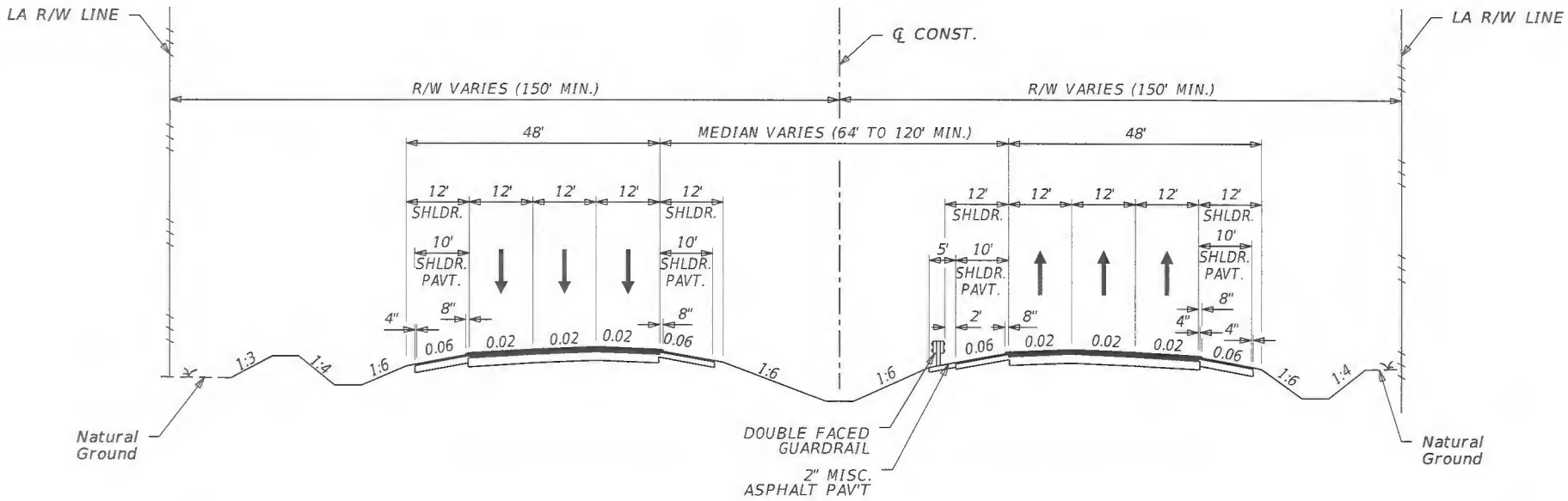

DESIGN SPEED = 70 MPH

SR 400 (I-4) WITH TRANSIT CORRIDOR & NO EXPRESS LANES

STA 3090+91.24 TO 3118+46.00

SHEET 4-5

APPROVED BY	FDOT CONCURRENCE	FHWA CONCURRENCE
ROBERT M. DENNEY, P.E. Date 2/9/17 Engineer Of Record 58593	A K Brennan 3/17/17 ANNETTE K. BRENNAN, P.E. FDOT District Design Engineer Date	FHWA Transportation Engineer 7/25/17 Date

HNTB CORPORATION
610 CRESCENT EXEC. CT.
SUITE 400
LAKE MARY, FL 32746
(407) 805-0355
CERT OF AUTH NO 6500

ROBERT M. DENNEY LICENSE No. 58593 STATE OF FLORIDA PROFESSIONAL ENGINEER

mbacal 2/9/2017 2:39:56 PM \\LKMw00\pmwork3\Jobs\59219 - I4 SAMR\TECHPROD\Typical Section Package\TYPDRD01-I-4 TYPICALS.DGN

PROJECT IDENTIFICATION

FINANCIAL PROJECT ID 432100-1-22-01 FEDERAL AID PROJECT NO. N/A COUNTY NAME VOLUSIA

SECTION NO. 79110 ROAD DESIGNATION SR 400 (I-4) LIMITS/MILEPOST MP 0.000 - 10.227

PROJECT DESCRIPTION WIDENING SR 400 (I-4) FROM WEST OF CR 532 TO WEST OF SR 435 KIRKMAN ROAD AND FROM 1 MILE EAST OF SR 434 TO 1/2 MILE EAST OF SR 472.

PROPOSED STRUCTURE TYPICAL SECTION

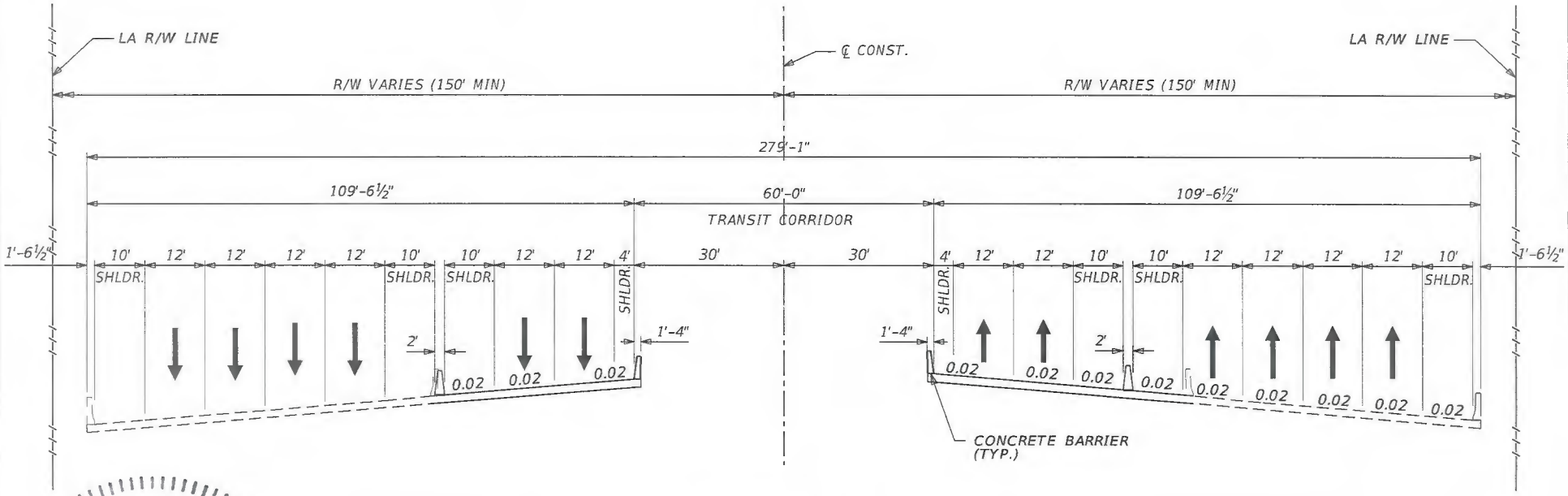

DESIGN SPEED = 70 MPH

SR 400 (I-4) BRIDGE OVER ST. JOHNS RIVER

SHEET 4-6

APPROVED BY	FDOT CONCURRENCE	FHWA CONCURRENCE
ROBERT M. DENNEY, P.E. Engineer Of Record 58593 — Date 2/9/17	ANNETTE K. BRENNAN, P.E. FDOT District Design Engineer — Date 3/17/17	FHWA Transportation Engineer — Date 7/25/17

HNTB CORPORATION
610 CRESCENT EXEC. CT.
SUITE 400
LAKE MARY, FL 32746
(407) 805-0355
CERT OF AUTH NO 6500

STATE OF FLORIDA ROBERT M. DENNEY LICENSE No. 58593 PROFESSIONAL ENGINEER

PROJECT IDENTIFICATION

FINANCIAL PROJECT ID 432100-1-22-01 FEDERAL AID PROJECT NO. N/A COUNTY NAME VOLUSIA

SECTION NO. 79110 ROAD DESIGNATION SR 400 (I-4) LIMITS/MILEPOST MP 0.000 - 10.227

PROJECT DESCRIPTION WIDENING SR 400 (I-4) FROM WEST OF CR 532 TO WEST OF SR 435 KIRKMAN ROAD AND FROM 1 MILE EAST OF SR 434 TO 1/2 MILE EAST OF SR 472.

PROPOSED STRUCTURE TYPICAL SECTION

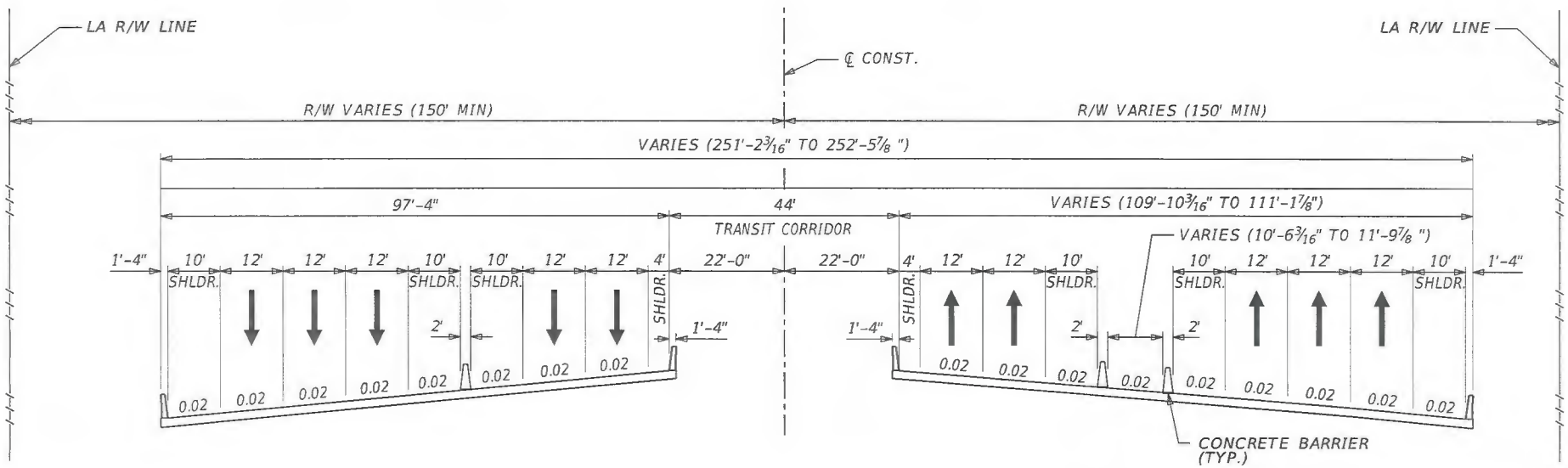

DESIGN SPEED = 70 MPH

SR 400 (I-4) BRIDGE ON THE DEBARY CAUSEWAY

SHEET 4-7

APPROVED BY	FDOT CONCURRENCE	FHWA CONCURRENCE
STATE OF FLORIDA ROBERT M. DENNEY, P.E. Date Engineer Of Record 58593	ANNETTE K. BRENNAN, P.E. FDOT District Design Engineer — Date 3/17/17	FHWA Transportation Engineer — Date 7/25/17
HNTB CORPORATION 610 CRESCENT EXEC. CT. SUITE 400 LAKE MARY, FL 32746 (407) 805-0355 CERT OF AUTH NO 6500		

ROBERT M. DENNEY LICENSE No. 58593 STATE OF FLORIDA PROFESSIONAL ENGINEER

PROJECT IDENTIFICATION

FINANCIAL PROJECT ID 432100-1-22-01 FEDERAL AID PROJECT NO. N/A COUNTY NAME VOLUSIA

SECTION NO. 79110 ROAD DESIGNATION SR 400 (I-4) LIMITS/MILEPOST MP 0.000 - 10.227

PROJECT DESCRIPTION WIDENING SR 400 (I-4) FROM WEST OF CR 532 TO WEST OF SR 435 KIRKMAN ROAD AND FROM 1 MILE EAST OF SR 434 TO 1/2 MILE EAST OF SR 472.

PROPOSED STRUCTURE TYPICAL SECTION

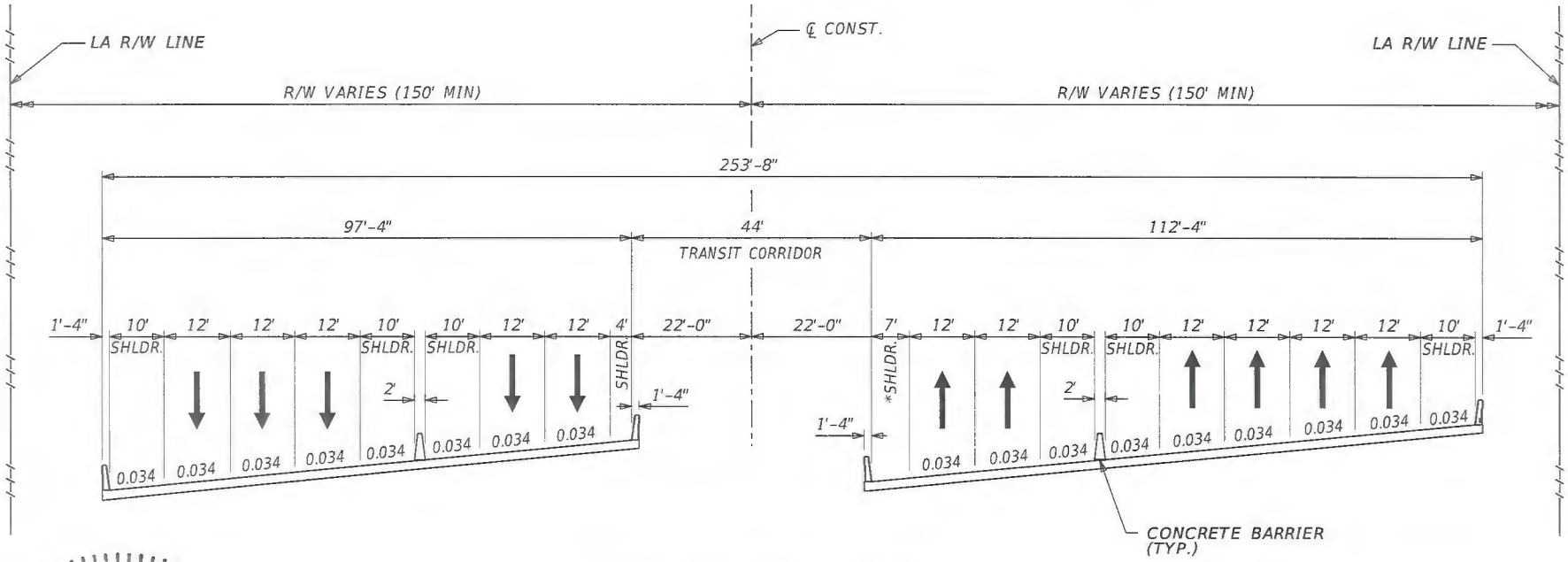

DESIGN SPEED = 70 MPH

SR 400 (I-4) BRIDGE OVER PADGETT CREEK

* 7-FT WIDE SHOULDER USED IN LIEU OF 4-FT SHOULDER TO MEET STOPPING SIGHT DISTANCE.

SHEET 4-8

ROBERT M. DENNEY LICENSE No. 58593 STATE OF FLORIDA PROFESSIONAL ENGINEER

APPROVED BY	FDOT CONCURRENCE	FHWA CONCURRENCE
ROBERT M. DENNEY, P.E. Date 2/17 Engineer Of Record 58593	ANNETTE K. BRENNAN, P.E. FDOT District Design Engineer Date 3/17/17	FHWA Transportation Engineer Date 7/25/17

HNTB CORPORATION
610 CRESCENT EXEC. CT.
SUITE 400
LAKE MARY, FL 32746
(407) 805-0355
CERT OF AUTH NO 6500

mbacal 2/9/2017 2:39:58 PM \\LKMw00\pmwork3\Jobs\59219 - I4 SAMR\TECHPROD\Typical Section Package\TYPDRD01-I-4 TYPICALS.DGN

PROJECT IDENTIFICATION

FINANCIAL PROJECT ID 432100-1-22-01 FEDERAL AID PROJECT NO. N/A COUNTY NAME VOLUSIA

SECTION NO. 79110 ROAD DESIGNATION SR 400 (I-4) LIMITS/MILEPOST MP 0.000 - 10.227

PROJECT DESCRIPTION WIDENING SR 400 (I-4) FROM WEST OF CR 532 TO WEST OF SR 435 KIRKMAN ROAD AND FROM 1 MILE EAST OF SR 434 TO 1/2 MILE EAST OF SR 472.

PROPOSED STRUCTURE TYPICAL SECTION

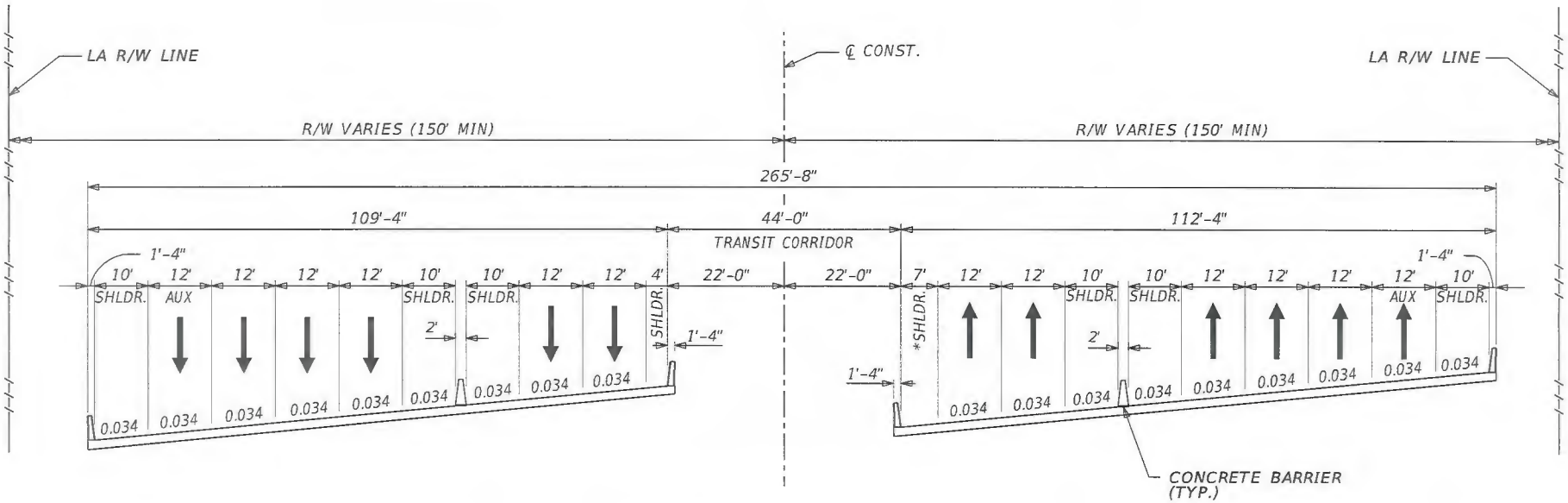

DESIGN SPEED = 70 MPH

SR 400 (I-4) BRIDGE OVER DIRKSEN DRIVE/DEBARY AVENUE

* 7-FT WIDE SHOULDER USED IN LIEU OF 4-FT SHOULDER TO MEET STOPPING SIGHT DISTANCE.

SHEET 4-9

APPROVED BY	FDOT CONCURRENCE	FHWA CONCURRENCE
ROBERT M. DENNEY, P.E. Date Engineer of Record 58593	ANNETTE K. BRENNAN, P.E. FDOT District Design Engineer Date 3/17/17	FHWA Transportation Engineer Date 7/25/17

HNTB CORPORATION
610 CRESCENT EXEC. CT.
SUITE 400
LAKE MARY, FL 32746
(407) 805-0355
CERT OF AUTH NO 6500

ROBERT M. DENNEY LICENSE No. 58593 STATE OF FLORIDA PROFESSIONAL ENGINEER

mbacal 2/[illegible]/17 2:39:58 PM \\LKMw00\pmwork3\Jobs\59219 - I4 SAMR\TECHPROD\Typical Section Package\TYPDRD01-I-4 TYPICALS.DGN

PROJECT IDENTIFICATION

FINANCIAL PROJECT ID 432100-1-22-01 FEDERAL AID PROJECT NO. N/A COUNTY NAME VOLUSIA

SECTION NO. 79110 ROAD DESIGNATION SR 400 (I-4) LIMITS/MILEPOST MP 0.000 - 10.227

PROJECT DESCRIPTION WIDENING SR 400 (I-4) FROM WEST OF CR 532 TO WEST OF SR 435 KIRKMAN ROAD AND FROM 1 MILE EAST OF SR 434 TO 1/2 MILE EAST OF SR 472.

Ramp	Design Speed
SEGMENT 4	
I-4 EB GUL RAMP TO DIRKSEN EB	40
I-4 EB GUL RAMP TO DIRKSEN WB	30-35
I-4 WB GUL RAMP TO DIRKSEN	30
DIRKSEN TO I-4 EB	30-40
DIRKSEN TO I-4 WB	30-65
I-4 EB GUL RAMP TO SAXON BLVD EB	40-50
I-4 EB GUL RAMP TO SAXON BLVD WB	30
SAXON BLVD RAMP TO I-4 EB GUL	40-50
SAXON BLVD RAMP TO I-4 WB GUL	20-30
SAXON BLVD RAMP TO I-4 WB GUL	30
I-4 WB GUL RAMP TO SAXON BLVD WB	30-50
SR 472 WB TO I-4 EB GUL RAMP	30
SR 472 EB TO I-4 WB GUL RAMP	40

PROPOSED ROADWAY TYPICAL SECTION

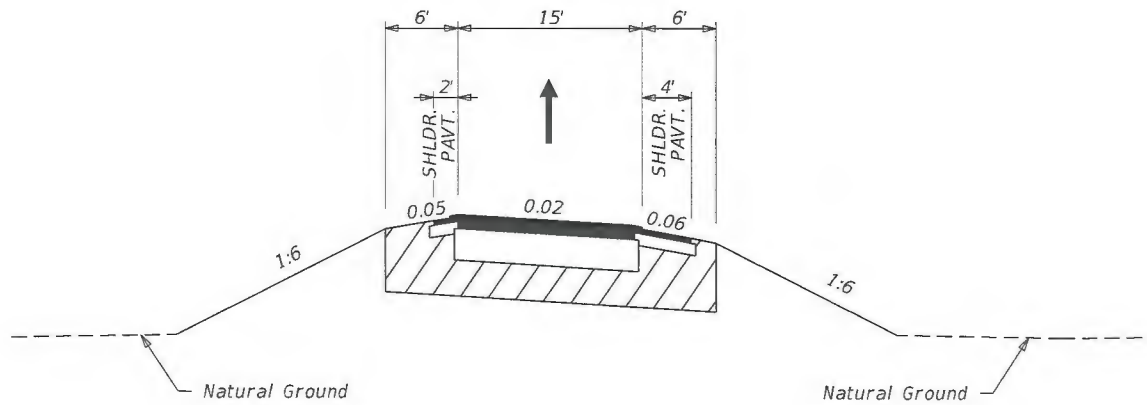

SR 400 (I-4)
ONE LANE RAMP

SHEET 4-10

APPROVED BY	FDOT CONCURRENCE	FHWA CONCURRENCE
ROBERT M. DENNEY, P.E. Date Engineer Of Record 58593 HNTB CORPORATION 610 CRESCENT EXEC. CT. SUITE 400 LAKE MARY, FL 32746 (407) 805-0355 CERT OF AUTH NO 6500	ANNETTE K. BRENNAN, P.E. 3/17/17 Date FDOT District Design Engineer	FHWA Transportation Engineer 7/25/17 Date

ROBERT M. DENNEY LICENSE No. 58593 STATE OF FLORIDA PROFESSIONAL ENGINEER

PROJECT IDENTIFICATION

FINANCIAL PROJECT ID 432100-1-22-01 FEDERAL AID PROJECT NO. N/A COUNTY NAME VOLUSIA

SECTION NO. 79110 ROAD DESIGNATION SR 400 (I-4) LIMITS/MILEPOST MP 0.000 - 10.227

PROJECT DESCRIPTION WIDENING SR 400 (I-4) FROM WEST OF CR 532 TO WEST OF SR 435 KIRKMAN ROAD AND FROM 1 MILE EAST OF SR 434 TO 1/2 MILE EAST OF SR 472.

Ramp	Design Speed
SEGMENT 4	
I-4 EB EL RAMP TO RHODE ISLAND	50
RHODE ISLAND RAMP TO I-4 WB EL	50

PROPOSED ROADWAY TYPICAL SECTION

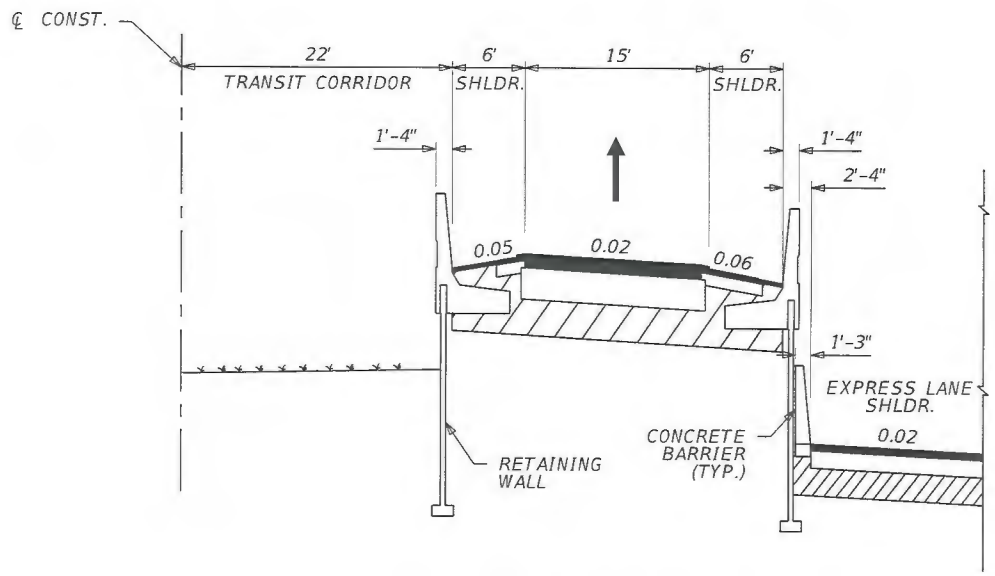

SR 400 (I-4)
ONE LANE EXPRESS LANE RAMP

SHEET 4-11

APPROVED BY	FDOT CONCURRENCE	FHWA CONCURRENCE
ROBERT N. DENNEY, P.E. Date Engineer Of Record 58593 HNTB CORPORATION 610 CRESCENT EXEC. CT. SUITE 400 LAKE MARY, FL 32746 (407) 805-0355 CERT OF AUTH NO 6500	ANNETTE K. BRENNAN, P.E. 3/17/17 Date FDOT District Design Engineer	FHWA Transportation Engineer 7/25/17 Date

STATE OF FLORIDA ROBERT N. DENNEY NO. 58593 PROFESSIONAL ENGINEER

mbacal 2/9/2017 2:39:59 PM \\LKMw00\pmwork3\Jobs\59219 - I4 SAMR\TECHPROD\Typical Section Package\TYPDRD01-RAMPS.DGN

PROJECT IDENTIFICATION

FINANCIAL PROJECT ID 432100-1-22-01 FEDERAL AID PROJECT NO. N/A COUNTY NAME VOLUSIA

SECTION NO. 79110 ROAD DESIGNATION SR 400 (I-4) LIMITS/MILEPOST MP 0.000 - 10.227

PROJECT DESCRIPTION WIDENING SR 400 (I-4) FROM WEST OF CR 532 TO WEST OF SR 435 KIRKMAN ROAD AND FROM 1 MILE EAST OF SR 434 TO 1/2 MILE EAST OF SR 472.

Ramp	Design Speed
SEGMENT 4	
DIRKSEN TO I-4 WB	30
I-4 EB GUL RAMP TO SAXON EB	40
SAXON TO I-4 EB GUL	40
I-4 EB GUL RAMP TO SR 472	25-50
I-4 WB GUL RAMP TO SR 472	25-50
SR 472 EB RAMP TO I-4 EB GUL	25-50
SR 472 WB RAMP TO I-4 WB GUL	25-50

PROPOSED ROADWAY TYPICAL SECTION

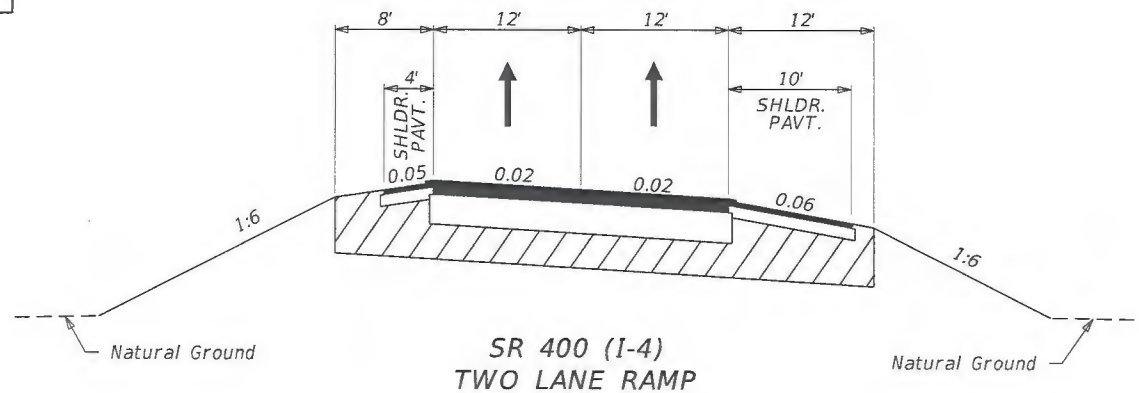

SR 400 (I-4)
TWO LANE RAMP

SHEET 4-12

APPROVED BY	FDOT CONCURRENCE	FHWA CONCURRENCE
ROBERT M. DENNEY, P.E. Date Engineer Of Record 58593	ANNETTE K. BRENNAN, P.E. Date FDOT District Design Engineer	FHWA Transportation Engineer Date

HNTB CORPORATION
610 CRESCENT EXEC. CT.
SUITE 400
LAKE MARY, FL 32746
(407) 805-0355
CERT OF AUTH NO 6500

ROBERT M. DENNEY LICENSE No. 58593 STATE OF FLORIDA PROFESSIONAL ENGINEER

3/17/17 AK Brennan

7/25/17

PROJECT IDENTIFICATION

FINANCIAL PROJECT ID 432100-1-22-01 FEDERAL AID PROJECT NO. N/A COUNTY NAME VOLUSIA

SECTION NO. 79110 ROAD DESIGNATION SR 400 (I-4) LIMITS/MILEPOST MP 0.000 - 10.227

PROJECT DESCRIPTION WIDENING SR 400 (I-4) FROM WEST OF CR 532 TO WEST OF SR 435 KIRKMAN ROAD AND FROM 1 MILE EAST OF SR 434 TO 1/2 MILE EAST OF SR 472.

Ramp	Design Speed
SEGMENT 4	
I-4 WB GUL RAMP TO SAXON	30
SR 472 WB RAMP TO I-4 WB GUL	35
SR 472 EB RAMP TO I-4 EB GUL	35

PROPOSED ROADWAY TYPICAL SECTION

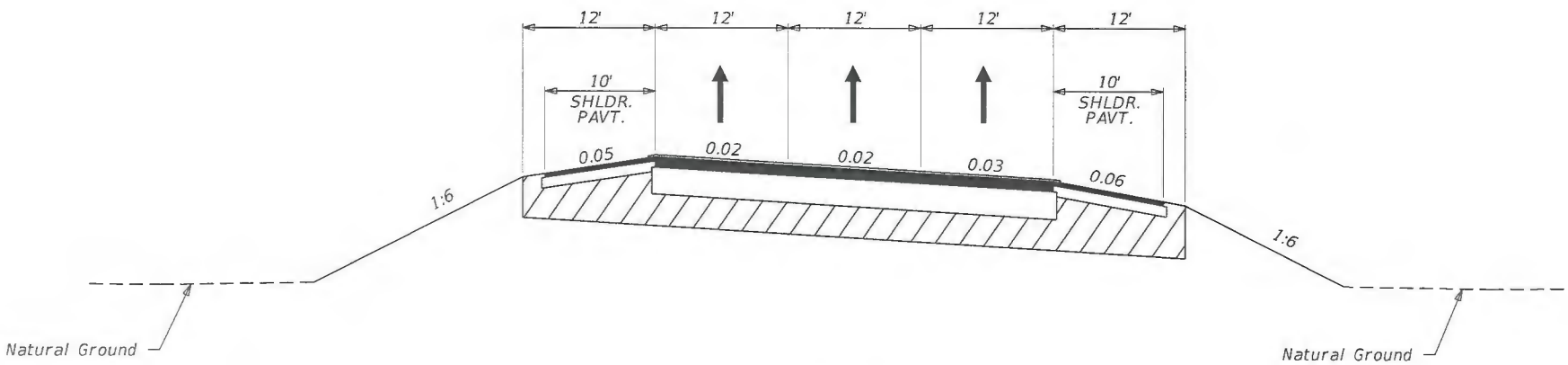

SR 400 (I-4)
THREE LANE RAMP

SHEET 4-13

APPROVED BY	FDOT CONCURRENCE	FHWA CONCURRENCE
ROBERT M. DENNEY, P.E. Date Engineer of Record 58593	ANNETTE K. BRENNAN, P.E. 3/17/17 Date FDOT District Design Engineer	FHWA Transportation Engineer 7/25/17 Date

HNTB CORPORATION
610 CRESCENT EXEC. CT.
SUITE 400
LAKE MARY, FL 32746
(407) 805-0355
CERT OF AUTH NO 6500

ROBERT M. DENNEY LICENSE No. 58593 STATE OF FLORIDA PROFESSIONAL ENGINEER

mbacal 2/9/2017 2:39:59 PM \\LKMw00\pmwork3\Jobs\59219 - I4 SAMR\TECHPROD\Typical Section Package\TYPDRD01-RAMPS.DGN

PROJECT IDENTIFICATION

FINANCIAL PROJECT ID: 432100-1-22-01 COUNTY (SECTION): VOLUSIA (79110)

PROJECT DESCRIPTION: WIDENING SR 400 (I-4) FROM WEST OF CR 532 TO WEST OF SR 435 (KIRKMAN RD.) AND FROM 1 MILE EAST OF SR 434 TO 1/2 MILE EAST OF SR 472.

PROJECT CONTROLS (DIRKSEN DRIVE)

FUNCTIONAL CLASSIFICATION

( ) RURAL
(X) URBAN

( ) FREEWAY/EXPWY. ( ) MAJOR COLL.
( ) PRINCIPAL ART. ( ) MINOR COLL.
(X) MINOR ART. ( ) LOCAL

HIGHWAY SYSTEM

Yes	No	
( )	(X)	NATIONAL HIGHWAY SYSTEM
( )	(X)	FLORIDA INTRASTATE HIGHWAY SYSTEM
( )	(X)	STRATEGIC INTERMODAL SYSTEM
( )	(X)	STATE HIGHWAY SYSTEM
(X)	( )	OFF STATE HIGHWAY SYSTEM

ACCESS CLASSIFICATION

( ) 1 - FREEWAY
( ) 2 - RESTRICTIVE w/Service Roads
( ) 3 - RESTRICTIVE w/660 ft. Connection Spacing
( ) 4 - NON-RESTRICTIVE w/2640 ft. Signal Spacing
(X) 5 - RESTRICTIVE w/440 ft. Connection Spacing
( ) 6 - NON-RESTRICTIVE w/1320 ft. Signal Spacing
( ) 7 - BOTH MEDIAN TYPES

TRAFFIC

	YEAR	AADT
OPENING	2020	21,000
INTERIM	2030	26,000
DESIGN	2040	30,000

DESIGN SPEED 40 MPH
POSTED SPEED 35 MPH

DISTRIBUTION

K	9.0
D	62.50
T_{24}	7.7%

CRITERIA

(X) NEW CONSTRUCTION / RECONSTRUCTION
( ) RRR INTERSTATE / FREEWAY
( ) RRR NON-INTERSTATE / FREEWAY
( ) TDLC / NEW CONSTRUCTION / RECONSTRUCTION
( ) TDLC / RRR
( ) MANUAL OF UNIFORM MINIMUM STANDARDS (FLORIDA GREENBOOK) (OFF-STATE HIGHWAY SYSTEM ONLY)

DESIGN SPEED APPROVALS

AK Brennan 3/17/17
DISTRICT DESIGN ENGINEER DATE

4/10/17
DISTRICT TRAFFIC OPERATIONS ENGINEER DATE

LIST ANY POTENTIAL EXCEPTIONS AND VARIATIONS RELATED TO TYPICAL SECTION ELEMENTS:

N/A

LIST MAJOR STRUCTURES LOCATION/DESCRIPTION - REQUIRING INDEPENDENT STRUCTURE DESIGN:

DIRKSEN DRIVE (790042, 790100)

LIST MAJOR UTILITIES WITHIN PROJECT CORRIDOR:

GAS (CENTRAL FLORIDA GAS)
WATER (VOLUSIA COUNTY UTILITIES)
COMMUNICATIONS (BRIGHTHOUSE NETWORKS, COMCAST, LEVEL 3, VERIZON)
WASTEWATER (VOLUSIA COUNTY UTILITIES)
ELECTRIC (DUKE ENERGY DISTRIBUTION, DUKE ENERGY TRANSMISSION)

LIST OTHER INFORMATION PERTINENT TO DESIGN OF PROJECT:

N/A

PROJECT IDENTIFICATION

FINANCIAL PROJECT ID 432100-1-22-01 FEDERAL AID PROJECT NO. N/A COUNTY NAME VOLUSIA

SECTION NO. 79110 ROAD DESIGNATION SR 400 (I-4) LIMITS/MILEPOST MP 0.000 - 10.227

PROJECT DESCRIPTION WIDENING SR 400 (I-4) FROM WEST OF CR 532 TO WEST OF SR 435 KIRKMAN ROAD AND FROM 1 MILE EAST OF SR 434 TO 1/2 MILE EAST OF SR 472.

PROPOSED ROADWAY TYPICAL SECTION

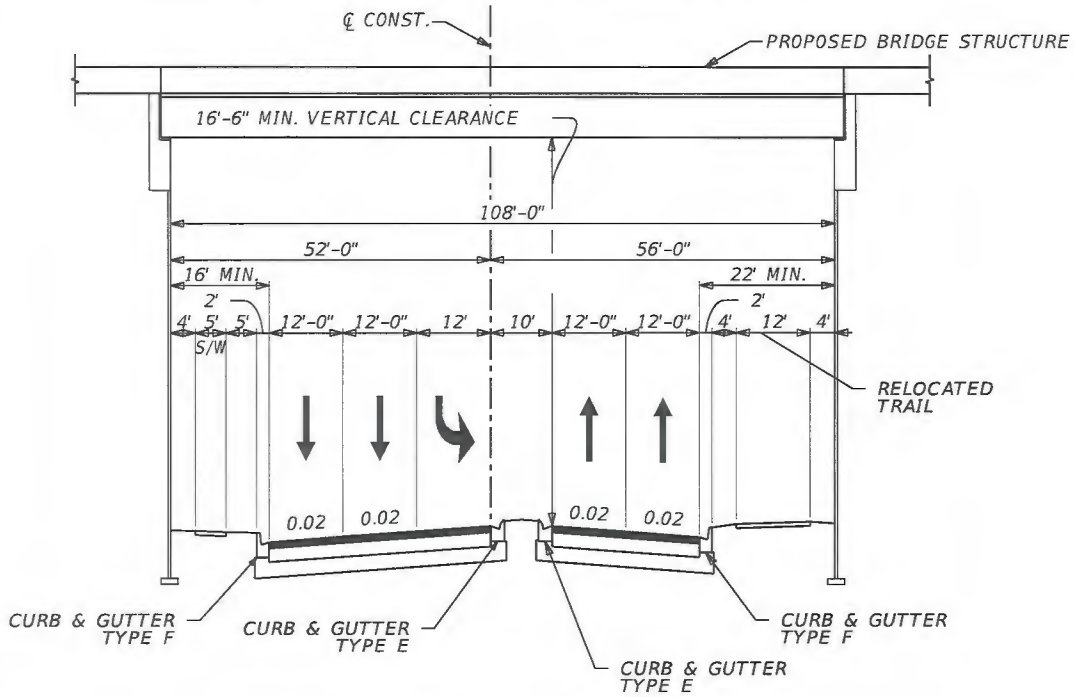

DESIGN SPEED = 40 MPH

DIRKSEN DRIVE UNDER SR 400 (I-4) ROADWAY SECTION

SHEET 4-15

APPROVED BY	FDOT CONCURRENCE	FHWA CONCURRENCE	COUNTY CONCURRENCE
ROBERT M. DENNEY, P.E. Engineer of Record 58593 Date 3/1/17	ANNETTE K. BRENNAN, P.E. FDOT District Design Engineer 3/17/17 Date	FHWA Transportation Engineer for 7/25/17 Date	County Engineer, P.E. 6/1/17 Date

HNTB CORPORATION
610 CRESCENT EXEC. CT.
SUITE 400
LAKE MARY, FL 32746
(407) 805-0355
CERT OF AUTH NO 6500

ROBERT M. DENNEY LICENSE No. 58593 STATE OF FLORIDA PROFESSIONAL ENGINEER

PROJECT IDENTIFICATION

FINANCIAL PROJECT ID 432100-1-22-01 FEDERAL AID PROJECT NO. N/A COUNTY NAME VOLUSIA

SECTION NO. 79110 ROAD DESIGNATION SR 400 (I-4) LIMITS/MILEPOST MP 0.000 - 10.227

PROJECT DESCRIPTION WIDENING SR 400 (I-4) FROM WEST OF CR 532 TO WEST OF SR 435 KIRKMAN ROAD AND FROM 1 MILE EAST OF SR 434 TO 1/2 MILE EAST OF SR 472.

PROPOSED ROADWAY TYPICAL SECTION

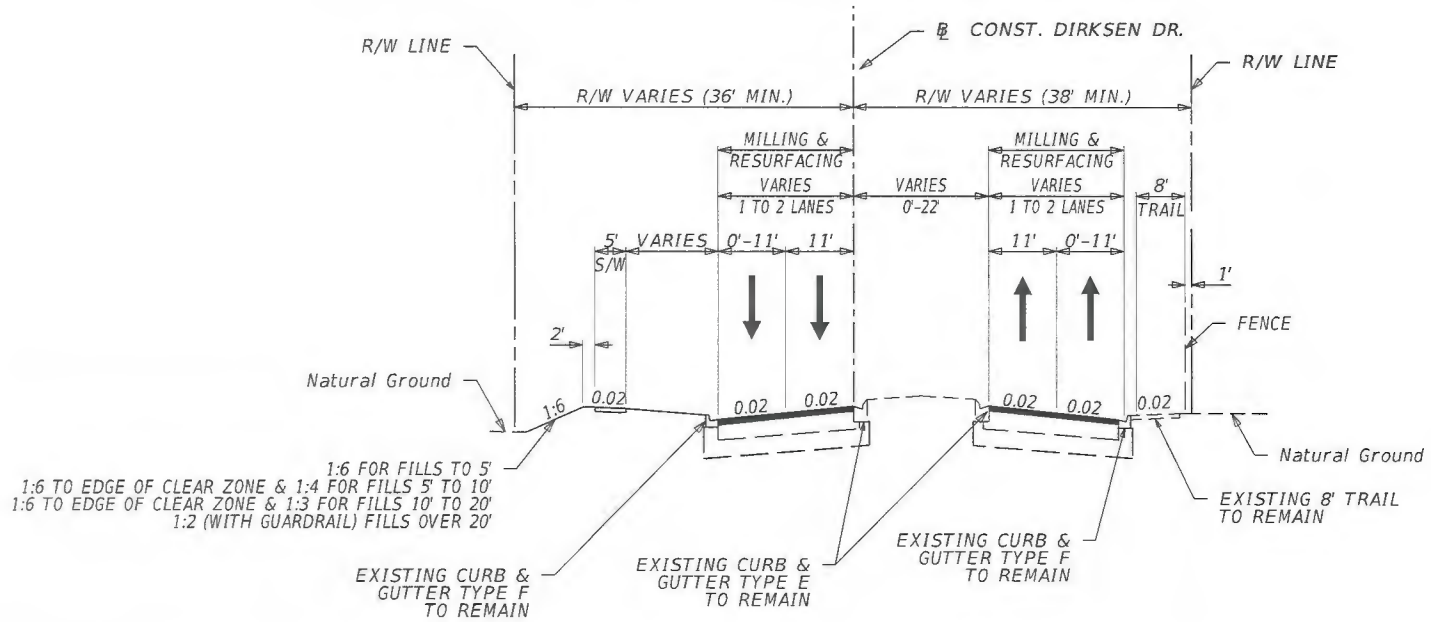

DESIGN SPEED = 40 MPH

DIRKSEN DRIVE ROADWAY SECTION (WEST OF I-4)

SHEET 4-16

ROBERT M. DENNEY LICENSE No. 58593 STATE OF FLORIDA PROFESSIONAL ENGINEER

APPROVED BY	FDOT CONCURRENCE	FHWA CONCURRENCE	COUNTY CONCURRENCE
ROBERT M. DENNEY, P.E. Date Engineer Of Record 58593 HNTB CORPORATION 610 CRESCENT EXEC. CT. SUITE 400 LAKE MARY, FL 32746 (407) 805-0355 CERT OF AUTH NO 6500	ANNETTE K. BRENNAN, P.E. FDOT District Design Engineer 3/17/17 Date	FHWA Transportation Engineer 7/25/17 for Date	County Engineer P.E. 6/1/17 Date

mbacal 2/9/2015 2:40:01 PM \\LKMw00\pmwork3\Jobs\59219 - I4 SAMR\TECHPROD\Typical Section Package\TYPDRD01-SEG-4.DGN

PROJECT IDENTIFICATION

FINANCIAL PROJECT ID 432100-1-22-01 FEDERAL AID PROJECT NO. N/A COUNTY NAME VOLUSIA

SECTION NO. 79110 ROAD DESIGNATION SR 400 (I-4) LIMITS/MILEPOST MP 0.000 - 10.227

PROJECT DESCRIPTION WIDENING SR 400 (I-4) FROM WEST OF CR 532 TO WEST OF SR 435 KIRKMAN ROAD AND FROM 1 MILE EAST OF SR 434 TO 1/2 MILE EAST OF SR 472.

PROPOSED ROADWAY TYPICAL SECTION

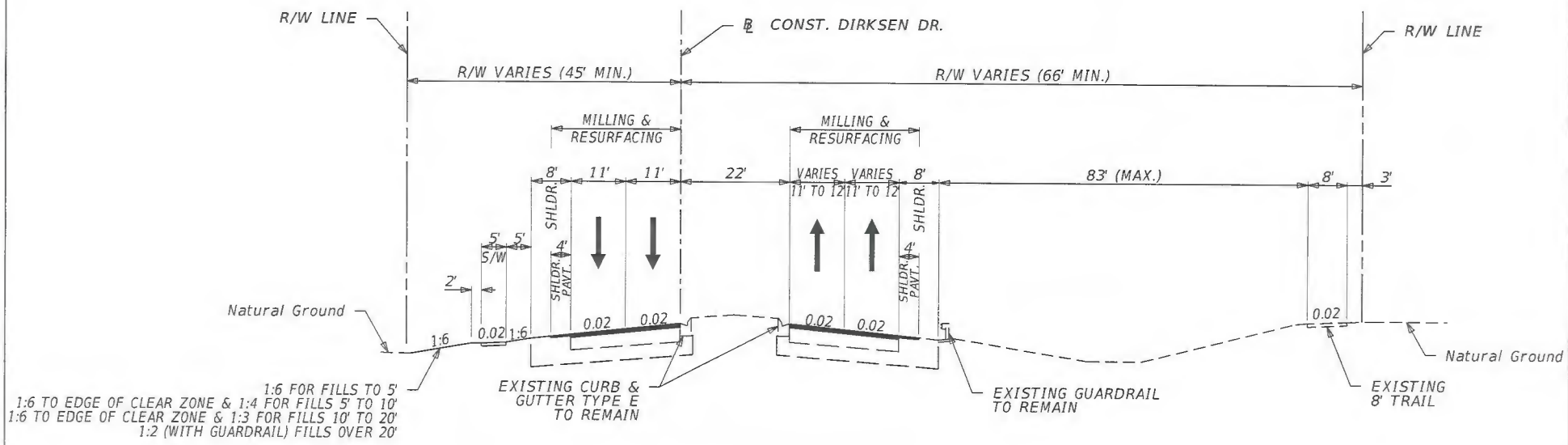

DESIGN SPEED = 40 MPH

DIRKSEN DRIVE ROADWAY SECTION (EAST OF I-4)

SHEET 4-17

APPROVED BY	FDOT CONCURRENCE	FHWA CONCURRENCE	COUNTY CONCURRENCE
ROBERT M. DENNEY, P.E. Engineer Of Record 58593 — Date 2/9/17	ANNETTE K. BRENNAN, P.E. FDOT District Design Engineer — Date 3/17/17	FHWA Transportation Engineer — Date 7/25/17	, P.E. County Engineer — Date 6/1/17

HNTB CORPORATION
610 CRESCENT EXEC. CT.
SUITE 400
LAKE MARY, FL 32746
(407) 805-0355
CERT OF AUTH NO 6500

ROBERT M. DENNEY LICENSE No. 58593 STATE OF FLORIDA PROFESSIONAL ENGINEER

mbacar 2/9/2017 2:40:02 PM \\LKMw00\pmwork3\Jobs\59219 - I4 SAMR\TECHPROD\Typical Section Package\TYPDRD01-SEG-4.DGN

PROJECT IDENTIFICATION

FINANCIAL PROJECT ID: 432100-1-22-01 COUNTY (SECTION): VOLUSIA (79110)

PROJECT DESCRIPTION: WIDENING SR 400 (I-4) FROM WEST OF CR 532 TO WEST OF SR 435 (KIRKMAN RD.) AND FROM 1 MILE EAST OF SR 434 TO 1/2 MILE EAST OF SR 472.

PROJECT CONTROLS (ENTERPRISE ROAD)

FUNCTIONAL CLASSIFICATION

( ) RURAL
(X) URBAN

( ) FREEWAY/EXPWY. ( ) MAJOR COLL.
( ) PRINCIPAL ART. ( ) MINOR COLL.
(X) MINOR ART. ( ) LOCAL

HIGHWAY SYSTEM

Yes	No	
( )	(X)	NATIONAL HIGHWAY SYSTEM
( )	(X)	FLORIDA INTRASTATE HIGHWAY SYSTEM
( )	(X)	STRATEGIC INTERMODAL SYSTEM
( )	(X)	STATE HIGHWAY SYSTEM
(X)	( )	OFF STATE HIGHWAY SYSTEM

ACCESS CLASSIFICATION

( ) 1 - FREEWAY
( ) 2 - RESTRICTIVE w/Service Roads
( ) 3 - RESTRICTIVE w/660 ft. Connection Spacing
( ) 4 - NON-RESTRICTIVE w/2640 ft. Signal Spacing
(X) 5 - RESTRICTIVE w/440 ft. Connection Spacing
( ) 6 - NON-RESTRICTIVE w/1320 ft. Signal Spacing
( ) 7 - BOTH MEDIAN TYPES

TRAFFIC

	YEAR	AADT
OPENING	2020	14,810
INTERIM	2030	14,958
DESIGN	2040	15,109

DESIGN SPEED 40 MPH
POSTED SPEED 35 MPH

DISTRIBUTION

K	9.0
D	62.50
T_{24}	10.2%

CRITERIA

(X) NEW CONSTRUCTION / RECONSTRUCTION
( ) RRR INTERSTATE / FREEWAY
( ) RRR NON-INTERSTATE / FREEWAY
( ) TDLC / NEW CONSTRUCTION / RECONSTRUCTION
( ) TDLC / RRR
( ) MANUAL OF UNIFORM MINIMUM STANDARDS (FLORIDA GREENBOOK) (OFF-STATE HIGHWAY SYSTEM ONLY)

DESIGN SPEED APPROVALS

A K Brennan — 3/17/17
DISTRICT DESIGN ENGINEER — DATE

[illegible] — 4/10/17
DISTRICT TRAFFIC OPERATIONS ENGINEER — DATE

LIST ANY POTENTIAL EXCEPTIONS AND VARIATIONS RELATED TO TYPICAL SECTION ELEMENTS:

N/A

LIST MAJOR STRUCTURES LOCATION/DESCRIPTION - REQUIRING INDEPENDENT STRUCTURE DESIGN:

ENTERPRISE ROAD (790191)

LIST MAJOR UTILITIES WITHIN PROJECT CORRIDOR:

GAS (CENTRAL FLORIDA GAS)
WATER (VOLUSIA COUNTY UTILITIES)
COMMUNICATIONS (BRIGHTHOUSE NETWORKS, COMCAST, LEVEL 3, VERIZON)
WASTEWATER (VOLUSIA COUNTY UTILITIES)
ELECTRIC (DUKE ENERGY DISTRIBUTION, DUKE ENERGY TRANSMISSION)

LIST OTHER INFORMATION PERTINENT TO DESIGN OF PROJECT:

N/A

PROJECT IDENTIFICATION

FINANCIAL PROJECT ID 432100-1-22-01 FEDERAL AID PROJECT NO. N/A COUNTY NAME VOLUSIA

SECTION NO. 79110 ROAD DESIGNATION SR 400 (I-4) LIMITS/MILEPOST MP 0.000 - 10.227

PROJECT DESCRIPTION WIDENING SR 400 (I-4) FROM WEST OF CR 532 TO WEST OF SR 435 KIRKMAN ROAD AND FROM 1 MILE EAST OF SR 434 TO 1/2 MILE EAST OF SR 472.

PROPOSED STRUCTURE TYPICAL SECTION

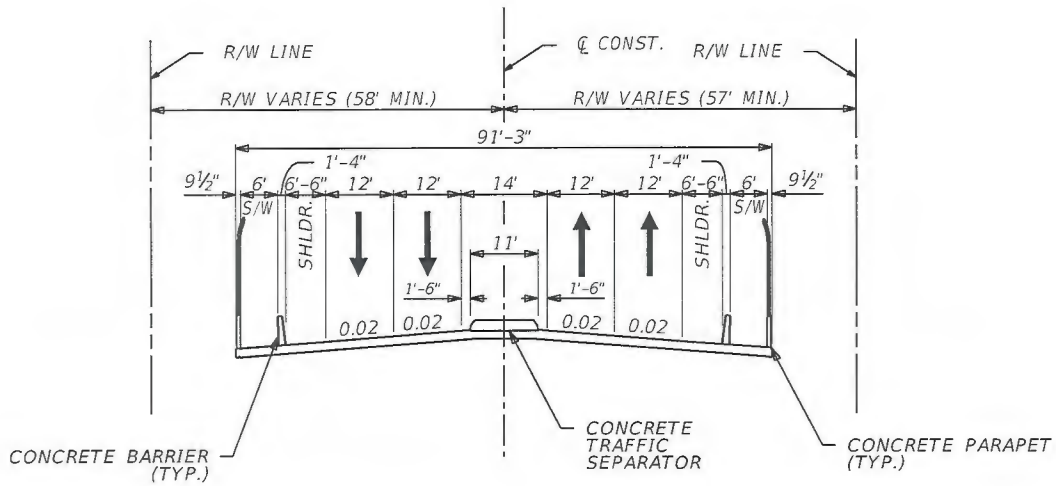

DESIGN SPEED = 40 MPH

ENTERPRISE RD. BRIDGE SECTION

SHEET 4-19

APPROVED BY	FDOT CONCURRENCE	FHWA CONCURRENCE	COUNTY CONCURRENCE
ROBERT M. DENNEY, P.E. Engineer of Record 58593 — Date 5/18/17	MARIO BIZZIO, P.E. FDOT District Design Engineer — Date 6/1/17	FHWA Transportation Engineer — Date 7/25/17	P.E. County Engineer — Date 6/1/17

HNTB CORPORATION
610 CRESCENT EXEC. CT.
SUITE 400
LAKE MARY, FL 32746
(407) 805-0355
CERT OF AUTH NO 6500

ROBERT M. DENNEY LICENSE No. 58593 STATE OF FLORIDA PROFESSIONAL ENGINEER

amourad 5/18/2017 2:40:31 PM \\LKMw00\pmwork3\Jobs\59219 - I4 SAMR\TECHPROD\Typical Section Package\TYPDRD01-SEG-4.DGN

PROJECT IDENTIFICATION

FINANCIAL PROJECT ID 432100-1-22-01 FEDERAL AID PROJECT NO. N/A COUNTY NAME VOLUSIA

SECTION NO. 79110 ROAD DESIGNATION SR 400 (I-4) LIMITS/MILEPOST MP 0.000 - 10.227

PROJECT DESCRIPTION WIDENING SR 400 (I-4) FROM WEST OF CR 532 TO WEST OF SR 435 KIRKMAN ROAD AND FROM 1 MILE EAST OF SR 434 TO 1/2 MILE EAST OF SR 472.

PROPOSED ROADWAY TYPICAL SECTION

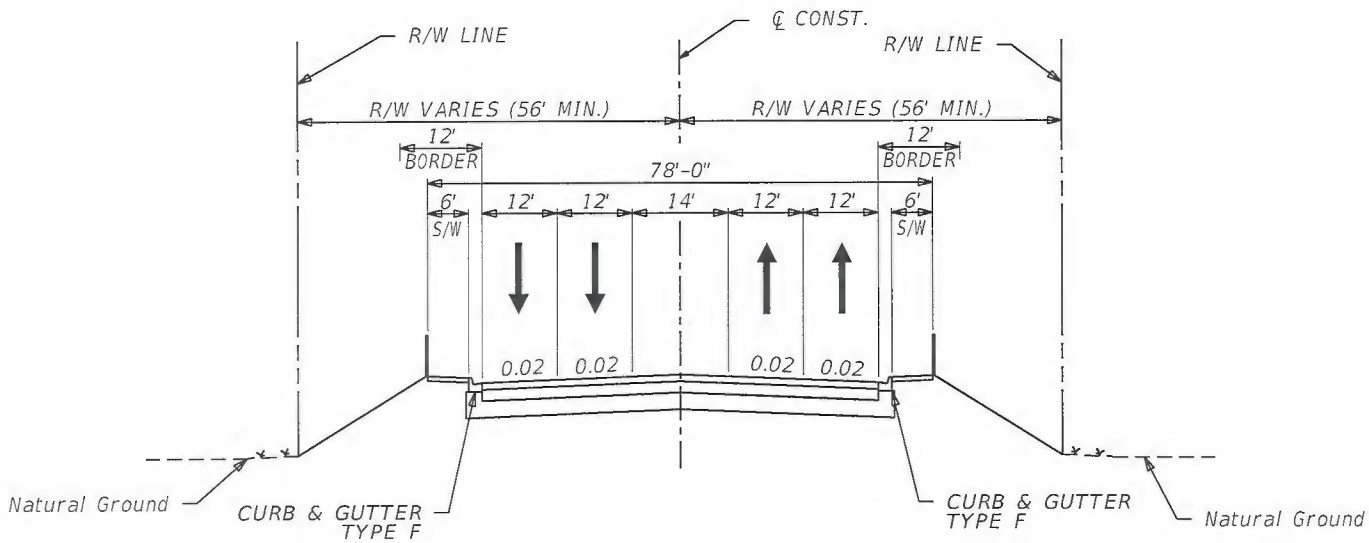

DESIGN SPEED = 40 MPH

ENTERPRISE RD. ROADWAY SECTION

SHEET 4-20

APPROVED BY	FDOT CONCURRENCE	FHWA CONCURRENCE	COUNTY CONCURRENCE
ROBERT M. DENNEY, P.E. Engineer of Record 58593 — Date 5/18/17	MARIO BIZZIO, P.E. FDOT District Design Engineer — Date 6/1/17	FHWA Transportation Engineer — Date 7/25/17	for County Engineer, P.E. — Date 6/1/17
HNTB CORPORATION 610 CRESCENT EXEC. CT. SUITE 400 LAKE MARY, FL 32746 (407) 805-0355 CERT OF AUTH NO 6500			

ROBERT M. DENNEY LICENSE No. 58593 STATE OF FLORIDA PROFESSIONAL ENGINEER

amourad 5/18/2017 2:40:32 PM \\LKMw00\pmwork3\Jobs\59219 - 14 SAMR\TECHPROD\Typical Section Package\TYPDRD01-SEG-4.DGN

PROJECT IDENTIFICATION

FINANCIAL PROJECT ID 432100-1-22-01 FEDERAL AID PROJECT NO. N/A COUNTY NAME VOLUSIA

SECTION NO. 79110 ROAD DESIGNATION SR 400 (I-4) LIMITS/MILEPOST MP 0.000 - 10.227

PROJECT DESCRIPTION WIDENING SR 400 (I-4) FROM WEST OF CR 532 TO WEST OF SR 435 KIRKMAN ROAD AND FROM 1 MILE EAST OF SR 434 TO 1/2 MILE EAST OF SR 472.

PROPOSED ROADWAY TYPICAL SECTION

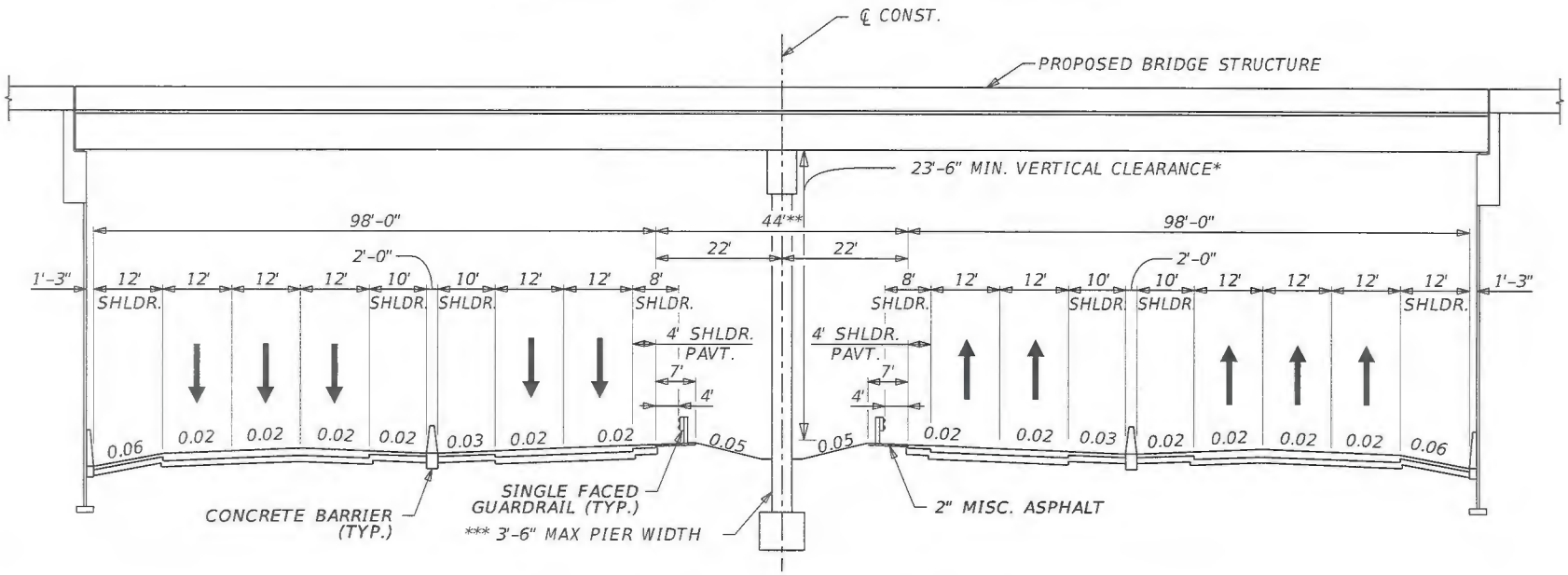

DESIGN SPEED = 70 MPH

SR 400 (I-4) UNDER ENTERPRISE RD.

* VERTICAL CLEARANCE MEASURED FROM EXPRESS LANE INSIDE EDGE OF TRAVEL TO LOW MEMBER.

** 44' REQUIRED FOR FUTURE TRANSIT CORRIDOR. FUTURE TRANSIT CORRIDOR IS MEASURED FROM FACE OF FUTURE INSIDE BARRIER TO FACE OF FUTURE INSIDE BARRIER.

*** 3'-6" MAXIMUM PIER WIDTH ALLOWED.

SHEET 4-21

APPROVED BY	FDOT CONCURRENCE	FHWA CONCURRENCE
STATE OF FLORIDA ROBERT M. DENNEY LICENSE No. 58593 PROFESSIONAL ENGINEER ROBERT M. DENNEY, P.E. Date 2-10-17 Engineer Of Record 58593 HNTB CORPORATION 610 CRESCENT EXEC. CT. SUITE 400 LAKE MARY, FL 32746 (407) 805-0355 CERT OF AUTH NO 6500	ANNETTE K. BRENNAN, P.E. FDOT District Design Engineer Date 3/17/17	FHWA Transportation Engineer Date 7/25/17

mbacal 2/9/2017 2:40:04 PM \\LKMw00\pmwork3\Jobs\59219 - I4 SAMR\TECHPROD\Typical Section Package\TYPDRD01-SEG-4.DGN

PROJECT IDENTIFICATION

FINANCIAL PROJECT ID: 432100-1-22-01 COUNTY (SECTION): VOLUSIA (79110)

PROJECT DESCRIPTION: WIDENING SR 400 (I-4) FROM WEST OF CR 532 TO WEST OF SR 435 (KIRKMAN RD.) AND FROM 1 MILE EAST OF SR 434 TO 1/2 MILE EAST OF SR 472.

PROJECT CONTROLS (SAXON BOULEVARD WEST OF SR 400)

FUNCTIONAL CLASSIFICATION

( ) RURAL
(X) URBAN

( ) FREEWAY/EXPWY. ( ) MAJOR COLL.
( ) PRINCIPAL ART. ( ) MINOR COLL.
(X) MINOR ART. ( ) LOCAL

HIGHWAY SYSTEM

Yes	No	
( )	(X)	NATIONAL HIGHWAY SYSTEM
( )	(X)	FLORIDA INTRASTATE HIGHWAY SYSTEM
( )	(X)	STRATEGIC INTERMODAL SYSTEM
( )	(X)	STATE HIGHWAY SYSTEM
(X)	( )	OFF STATE HIGHWAY SYSTEM

ACCESS CLASSIFICATION

( ) 1 - FREEWAY
( ) 2 - RESTRICTIVE w/Service Roads
( ) 3 - RESTRICTIVE w/660 ft. Connection Spacing
( ) 4 - NON-RESTRICTIVE w/2640 ft. Signal Spacing
(X) 5 - RESTRICTIVE w/440 ft. Connection Spacing
( ) 6 - NON-RESTRICTIVE w/1320 ft. Signal Spacing
( ) 7 - BOTH MEDIAN TYPES

TRAFFIC

	YEAR	AADT
OPENING	2020	49,000
INTERIM	2030	54,000
DESIGN	2040	59,000

DESIGN SPEED 45 MPH
POSTED SPEED 45 MPH

DISTRIBUTION

K	9.0
D	62.50
T_{24}	10.2%

CRITERIA

(X) NEW CONSTRUCTION / RECONSTRUCTION
( ) RRR INTERSTATE / FREEWAY
( ) RRR NON-INTERSTATE / FREEWAY
( ) TDLC / NEW CONSTRUCTION / RECONSTRUCTION
( ) TDLC / RRR
( ) MANUAL OF UNIFORM MINIMUM STANDARDS (FLORIDA GREENBOOK) (OFF-STATE HIGHWAY SYSTEM ONLY)

DESIGN SPEED APPROVALS

A K Brennan — 3/17/17
DISTRICT DESIGN ENGINEER — DATE

[illegible] — 4/10/17
DISTRICT TRAFFIC OPERATIONS ENGINEER — DATE

LIST ANY POTENTIAL EXCEPTIONS AND VARIATIONS RELATED TO TYPICAL SECTION ELEMENTS:

N/A

LIST MAJOR STRUCTURES LOCATION/DESCRIPTION - REQUIRING INDEPENDENT STRUCTURE DESIGN:

SAXON BOULEVARD (790167, 790166)

LIST MAJOR UTILITIES WITHIN PROJECT CORRIDOR:

GAS (CENTRAL FLORIDA GAS)
WATER (VOLUSIA COUNTY UTILITIES)
COMMUNICATIONS (BRIGHTHOUSE NETWORKS, COMCAST, LEVEL 3, VERIZON)
WASTEWATER (VOLUSIA COUNTY UTILITIES)
ELECTRIC (DUKE ENERGY DISTRIBUTION, DUKE ENERGY TRANSMISSION)

LIST OTHER INFORMATION PERTINENT TO DESIGN OF PROJECT:

N/A

PROJECT IDENTIFICATION

FINANCIAL PROJECT ID: 432100-1-22-01 COUNTY (SECTION): VOLUSIA (79110)

PROJECT DESCRIPTION: WIDENING SR 400 (I-4) FROM WEST OF CR 532 TO WEST OF SR 435 (KIRKMAN RD.) AND FROM 1 MILE EAST OF SR 434 TO 1/2 MILE EAST OF SR 472.

PROJECT CONTROLS (SAXON BOULEVARD EAST OF SR 400)

FUNCTIONAL CLASSIFICATION

( ) RURAL
(X) URBAN

( ) FREEWAY/EXPWY. ( ) MAJOR COLL.
( ) PRINCIPAL ART. ( ) MINOR COLL.
(X) MINOR ART. ( ) LOCAL

HIGHWAY SYSTEM

Yes	No	
( )	(X)	NATIONAL HIGHWAY SYSTEM
( )	(X)	FLORIDA INTRASTATE HIGHWAY SYSTEM
( )	(X)	STRATEGIC INTERMODAL SYSTEM
( )	(X)	STATE HIGHWAY SYSTEM
(X)	( )	OFF STATE HIGHWAY SYSTEM

ACCESS CLASSIFICATION

( ) 1 - FREEWAY
( ) 2 - RESTRICTIVE w/Service Roads
( ) 3 - RESTRICTIVE w/660 ft. Connection Spacing
( ) 4 - NON-RESTRICTIVE w/2640 ft. Signal Spacing
(X) 5 - RESTRICTIVE w/440 ft. Connection Spacing
( ) 6 - NON-RESTRICTIVE w/1320 ft. Signal Spacing
( ) 7 - BOTH MEDIAN TYPES

TRAFFIC

	YEAR	AADT
OPENING	2020	49,000
INTERIM	2030	54,000
DESIGN	2040	59,000

DESIGN SPEED 40 MPH
POSTED SPEED 40 MPH

DISTRIBUTION

K	9.0
D	62.50
T_{24}	10.2%

CRITERIA

(X) NEW CONSTRUCTION / RECONSTRUCTION
( ) RRR INTERSTATE / FREEWAY
( ) RRR NON-INTERSTATE / FREEWAY
( ) TDLC / NEW CONSTRUCTION / RECONSTRUCTION
( ) TDLC / RRR
( ) MANUAL OF UNIFORM MINIMUM STANDARDS (FLORIDA GREENBOOK) (OFF-STATE HIGHWAY SYSTEM ONLY)

DESIGN SPEED APPROVALS

A K Brennan — 3/17/17
DISTRICT DESIGN ENGINEER — DATE

James Stuff — 4/10/17
DISTRICT TRAFFIC OPERATIONS ENGINEER — DATE

LIST ANY POTENTIAL EXCEPTIONS AND VARIATIONS RELATED TO TYPICAL SECTION ELEMENTS:

N/A

LIST MAJOR STRUCTURES LOCATION/DESCRIPTION - REQUIRING INDEPENDENT STRUCTURE DESIGN:

SAXON BOULEVARD (790167, 790166)

LIST MAJOR UTILITIES WITHIN PROJECT CORRIDOR:

GAS (CENTRAL FLORIDA GAS)
WATER (VOLUSIA COUNTY UTILITIES)
COMMUNICATIONS (BRIGHTHOUSE NETWORKS, COMCAST, LEVEL 3, VERIZON)
WASTEWATER (VOLUSIA COUNTY UTILITIES)
ELECTRIC (DUKE ENERGY DISTRIBUTION, DUKE ENERGY TRANSMISSION)

LIST OTHER INFORMATION PERTINENT TO DESIGN OF PROJECT:

N/A

PROJECT IDENTIFICATION

FINANCIAL PROJECT ID 432100-1-22-01 FEDERAL AID PROJECT NO. N/A COUNTY NAME VOLUSIA

SECTION NO. 79110 ROAD DESIGNATION SR 400 (I-4) LIMITS/MILEPOST MP 0.000 - 10.227

PROJECT DESCRIPTION WIDENING SR 400 (I-4) FROM WEST OF CR 532 TO WEST OF SR 435 KIRKMAN ROAD AND FROM 1 MILE EAST OF SR 434 TO 1/2 MILE EAST OF SR 472.

PROPOSED STRUCTURE TYPICAL SECTION

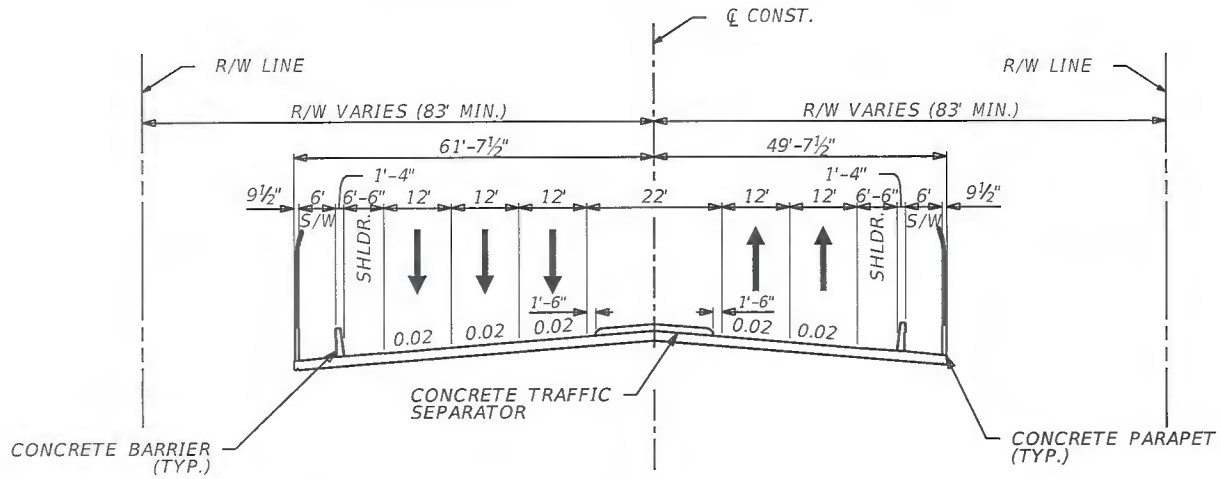

DESIGN SPEED = 45 MPH

SAXON BOULEVARD BRIDGE SECTION

SHEET 4-24

APPROVED BY	FDOT CONCURRENCE	FHWA CONCURRENCE	COUNTY CONCURRENCE
ROBERT M. DENNEY, P.E. Engineer of Record 58593 — Date 5/18/17 — INTB CORPORATION, 610 CRESCENT EXEC. CT. SUITE 400, LAKE MARY, FL 32746, (407) 805-0355, CERT OF AUTH NO 6500	MARIO BIZZIO, P.E. FDOT District Design Engineer — Date 6/1/17	FHWA Transportation Engineer — Date 7/25/17	, P.E. County Engineer — Date 6/1/17

ROBERT M. DENNEY LICENSE No. 58593 STATE OF FLORIDA PROFESSIONAL ENGINEER

amourad 5/18/2017 2:40:32 PM \\LKMw00\pmwork3\Jobs\59219 - I4 SAMR\TECHPROD\Typical Section Package\TYPDRD01-SEG-4.DGN

PROJECT IDENTIFICATION

FINANCIAL PROJECT ID 432100-1-22-01 FEDERAL AID PROJECT NO. N/A COUNTY NAME VOLUSIA

SECTION NO. 79110 ROAD DESIGNATION SR 400 (I-4) LIMITS/MILEPOST MP 0.000 - 10.227

PROJECT DESCRIPTION WIDENING SR 400 (I-4) FROM WEST OF CR 532 TO WEST OF SR 435 KIRKMAN ROAD AND FROM 1 MILE EAST OF SR 434 TO 1/2 MILE EAST OF SR 472.

PROPOSED ROADWAY TYPICAL SECTION

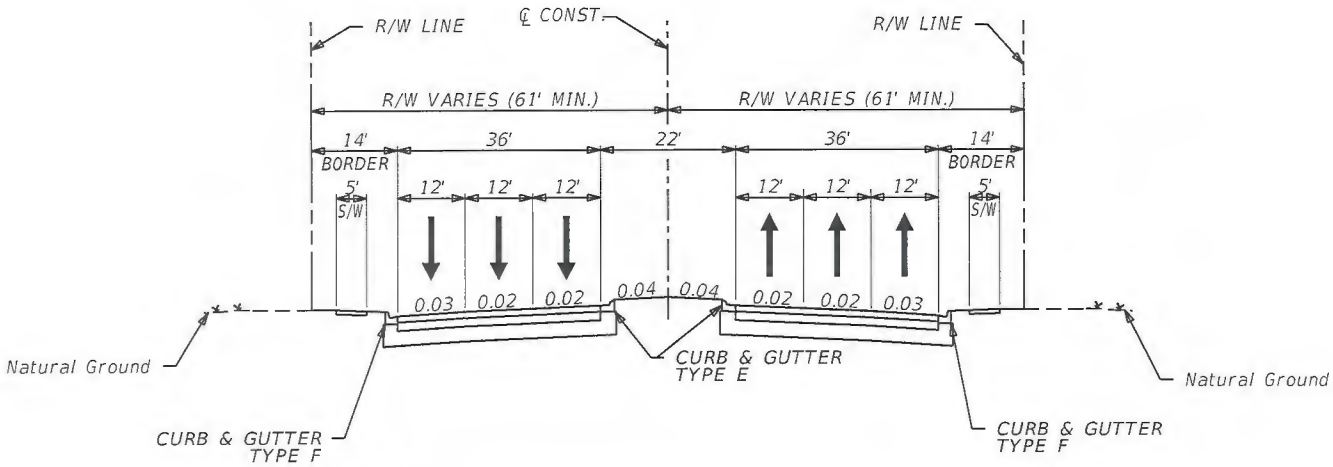

DESIGN SPEED = 45 MPH

SAXON BOULEVARD ROADWAY SECTION (WEST OF SR 400)

SHEET 4-25

APPROVED BY	FDOT CONCURRENCE	FHWA CONCURRENCE	COUNTY CONCURRENCE
ROBERT M. DENNEY, P.E. Engineer Of Record 58593 — Date 5/18/17 — INTB CORPORATION, 610 CRESCENT EXEC. CT. SUITE 400, LAKE MARY, FL 32746, (407) 805-0355, CERT OF AUTH NO 6500	MARIO BIZZIO, P.E. FDOT District Design Engineer — Date 6/1/17	FHWA Transportation Engineer — Date 7/25/17	, P.E. County Engineer — Date 6/1/17

ROBERT M. DENNEY LICENSE No 58593 STATE OF FLORIDA PROFESSIONAL ENGINEER

amourad 5/18/2017 2:40:33 PM \\LKMw00\pmwork3\Jobs\59219 - I4 SAMR\TECHPROD\Typical Section Package\TYPDRD01-SEG-4.DGN

PROJECT IDENTIFICATION

FINANCIAL PROJECT ID 432100-1-22-01 FEDERAL AID PROJECT NO. N/A COUNTY NAME VOLUSIA

SECTION NO. 79110 ROAD DESIGNATION SR 400 (I-4) LIMITS/MILEPOST MP 0.000 - 10.227

PROJECT DESCRIPTION WIDENING SR 400 (I-4) FROM WEST OF CR 532 TO WEST OF SR 435 KIRKMAN ROAD AND FROM 1 MILE EAST OF SR 434 TO 1/2 MILE EAST OF SR 472.

PROPOSED ROADWAY TYPICAL SECTION

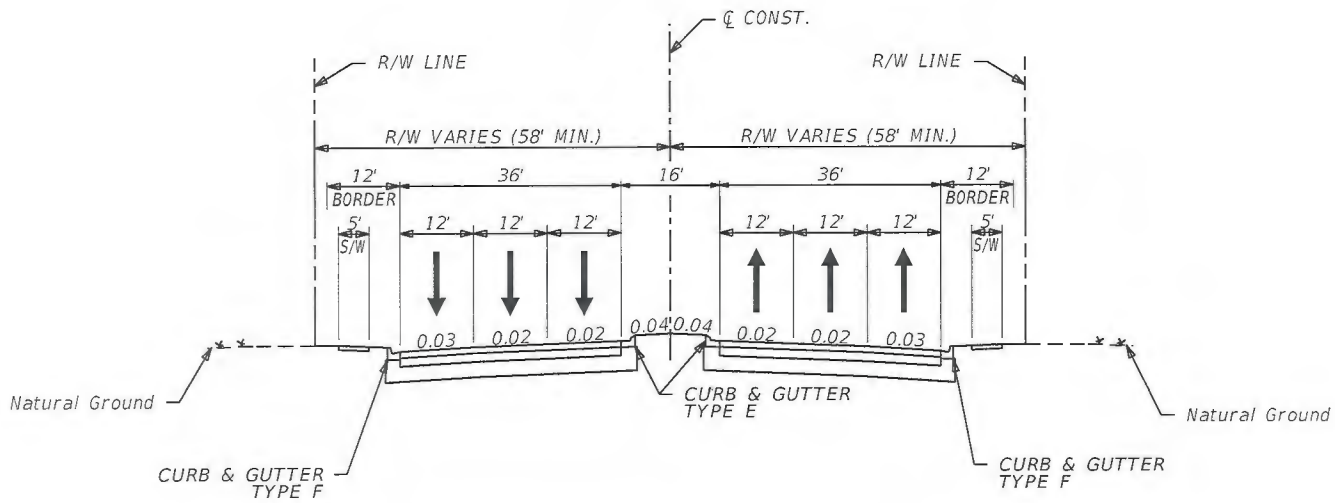

DESIGN SPEED = 40 MPH

SAXON BOULEVARD ROADWAY SECTION (EAST OF SR 400)

SHEET 4-26

APPROVED BY	FDOT CONCURRENCE	FHWA CONCURRENCE	COUNTY CONCURRENCE
ROBERT M. DENNEY, P.E. Date Engineer Of Record 58593	HNTB CORPORATION 610 CRESCENT EXEC. CT. SUITE 400 LAKE MARY, FL 32746 (407) 805-0355 CERT OF AUTH NO 6500	MARIO BIZZIO, P.E. FDOT District Design Engineer 6/1/17 Date	FHWA Transportation Engineer 7/25/17 Date	, P.E. County Engineer 6/1/17 Date

ROBERT M. DENNEY LICENSE No. 58593 STATE OF FLORIDA PROFESSIONAL ENGINEER

amourad 5/18/2017 2:40:34 PM \\LKMw00\pmworks3\Jobs\59219 - I4 SAMR\TECHPROD\Typical Section Package\TYPDRD01-SEG-4.DGN

PROJECT IDENTIFICATION

FINANCIAL PROJECT ID 432100-1-22-01 FEDERAL AID PROJECT NO. N/A COUNTY NAME VOLUSIA

SECTION NO. 79110 ROAD DESIGNATION SR 400 (I-4) LIMITS/MILEPOST MP 0.000 - 10.227

PROJECT DESCRIPTION WIDENING SR 400 (I-4) FROM WEST OF CR 532 TO WEST OF SR 435 KIRKMAN ROAD AND FROM 1 MILE EAST OF SR 434 TO 1/2 MILE EAST OF SR 472.

PROPOSED ROADWAY TYPICAL SECTION

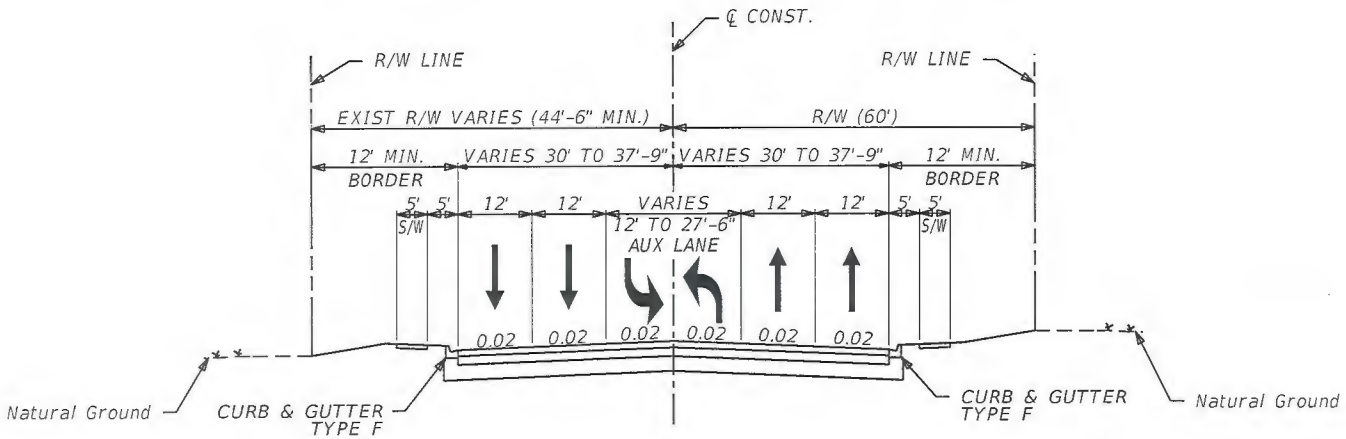

DESIGN SPEED = 40 MPH

SAXON BOULEVARD ROADWAY SECTION (EAST OF NORMANDY BOULEVARD)

SHEET 4-27

APPROVED BY	FDOT CONCURRENCE	FHWA CONCURRENCE	COUNTY CONCURRENCE
ROBERT M. DENNEY, P.E. Engineer Of Record 58593 — Date 6/1/17	MARIO BIZZIO, P.E. FDOT District Design Engineer — Date 6/1/17	FHWA Transportation Engineer — Date 7/25/17	for, P.E. County Engineer — Date 6/1/17

HNTB CORPORATION
610 CRESCENT EXEC. CT.
SUITE 400
LAKE MARY, FL 32746
(407) 805-0355
CERT OF AUTH NO 6500

ROBERT M. DENNEY LICENSE No 58593 STATE OF FLORIDA PROFESSIONAL ENGINEER

amourad 5/12/2017 2:40:34 PM \\LKMw00\pmwork3\Jobs\59219 - I4 SAMR\TECHPROD\Typical Section Package\TYPDRD01-SEG-4.DGN

PROJECT IDENTIFICATION

FINANCIAL PROJECT ID 432100-1-22-01 FEDERAL AID PROJECT NO. N/A COUNTY NAME VOLUSIA

SECTION NO. 79110 ROAD DESIGNATION SR 400 (I-4) LIMITS/MILEPOST MP 0.000 - 10.227

PROJECT DESCRIPTION WIDENING SR 400 (I-4) FROM WEST OF CR 532 TO WEST OF SR 435 KIRKMAN ROAD AND FROM 1 MILE EAST OF SR 434 TO 1/2 MILE EAST OF SR 472.

PROPOSED ROADWAY TYPICAL SECTION

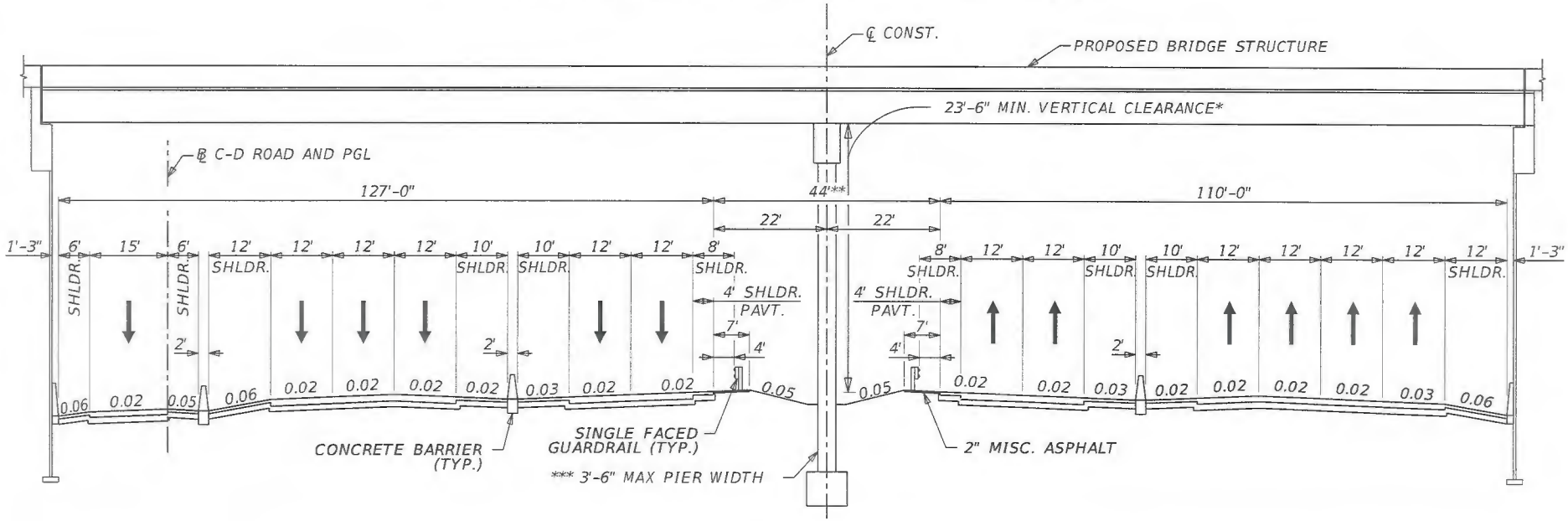

DESIGN SPEED = 70 MPH

SR 400 (I-4) UNDER SAXON BOULEVARD

* VERTICAL CLEARANCE MEASURED FROM EXPRESS LANE INSIDE EDGE OF TRAVEL TO LOW MEMBER.

** 44' REQUIRED FOR FUTURE TRANSIT CORRIDOR. FUTURE TRANSIT CORRIDOR IS MEASURED FROM FACE OF FUTURE INSIDE BARRIER TO FACE OF FUTURE INSIDE BARRIER.

*** 3'-6" MAXIMUM PIER WIDTH ALLOWED.

SHEET 4-28

APPROVED BY	FDOT CONCURRENCE	FHWA CONCURRENCE
HNTB CORPORATION 610 CRESCENT EXEC. CT. SUITE 400 LAKE MARY, FL 32746 (407) 805-0355 CERT OF AUTH NO 6500 ROBERT M. DENNEY, P.E. Date Engineer of Record 58593	ANNETTE K. BRENNAN, P.E. FDOT District Design Engineer 3/17/17 Date	FHWA Transportation Engineer 7/25/17 Date

ROBERT M. DENNEY LICENSE No. 58593 STATE OF FLORIDA PROFESSIONAL ENGINEER

mbaca 2/9/2017 2:40:07 PM \\LKMw00\pmwork3\Jobs\59219 - I4 SAMR\TECHPROD\Typical Section Package\TYPDRD01-SEG-4.DGN

PROJECT IDENTIFICATION

FINANCIAL PROJECT ID: 432100-1-22-01 COUNTY (SECTION): VOLUSIA (79110)

PROJECT DESCRIPTION: WIDENING SR 400 (I-4) FROM WEST OF CR 532 TO WEST OF SR 435 (KIRKMAN RD.) AND FROM 1 MILE EAST OF SR 434 TO 1/2 MILE EAST OF SR 472.

PROJECT CONTROLS (RHODE ISLAND AVENUE)

FUNCTIONAL CLASSIFICATION

( ) RURAL
(X) URBAN

( ) FREEWAY/EXPWY. (X) MAJOR COLL.
( ) PRINCIPAL ART. ( ) MINOR COLL.
( ) MINOR ART. ( ) LOCAL

HIGHWAY SYSTEM

Yes	No	
( )	(X)	NATIONAL HIGHWAY SYSTEM
( )	(X)	FLORIDA INTRASTATE HIGHWAY SYSTEM
( )	(X)	STRATEGIC INTERMODAL SYSTEM
( )	(X)	STATE HIGHWAY SYSTEM
(X)	( )	OFF STATE HIGHWAY SYSTEM

ACCESS CLASSIFICATION

( ) 1 - FREEWAY
( ) 2 - RESTRICTIVE w/Service Roads
( ) 3 - RESTRICTIVE w/660 ft. Connection Spacing
(X) 4 - NON-RESTRICTIVE w/2640 ft. Signal Spacing
( ) 5 - RESTRICTIVE w/440 ft. Connection Spacing
( ) 6 - NON-RESTRICTIVE w/1320 ft. Signal Spacing
( ) 7 - BOTH MEDIAN TYPES

TRAFFIC

	YEAR	AADT
OPENING	2020	18,000
INTERIM	2030	20,000
DESIGN	2040	22,000

DESIGN SPEED 40 MPH
POSTED SPEED 40 MPH

DISTRIBUTION

K	9.0
D	62.50
T_{24}	6.4%

CRITERIA

(X) NEW CONSTRUCTION / RECONSTRUCTION
( ) RRR INTERSTATE / FREEWAY
( ) RRR NON-INTERSTATE / FREEWAY
( ) TDLC / NEW CONSTRUCTION / RECONSTRUCTION
( ) TDLC / RRR
( ) MANUAL OF UNIFORM MINIMUM STANDARDS (FLORIDA GREENBOOK) (OFF-STATE HIGHWAY SYSTEM ONLY)

DESIGN SPEED APPROVALS

A K Brennan — 3/17/17
DISTRICT DESIGN ENGINEER — DATE

James Stokes — 4/10/17
DISTRICT TRAFFIC OPERATIONS ENGINEER — DATE

LIST ANY POTENTIAL EXCEPTIONS AND VARIATIONS RELATED TO TYPICAL SECTION ELEMENTS:

N/A

LIST MAJOR STRUCTURES LOCATION/DESCRIPTION - REQUIRING INDEPENDENT STRUCTURE DESIGN:

RHODE ISLAND AVENUE (PROPOSED)

LIST MAJOR UTILITIES WITHIN PROJECT CORRIDOR:

GAS (CENTRAL FLORIDA GAS)
WATER (VOLUSIA COUNTY UTILITIES)
COMMUNICATIONS (BRIGHTHOUSE NETWORKS, COMCAST, LEVEL 3, VERIZON)
WASTEWATER (VOLUSIA COUNTY UTILITIES)
ELECTRIC (DUKE ENERGY DISTRIBUTION, DUKE ENERGY TRANSMISSION)

LIST OTHER INFORMATION PERTINENT TO DESIGN OF PROJECT:

N/A

PROJECT IDENTIFICATION

FINANCIAL PROJECT ID 432100-1-22-01 FEDERAL AID PROJECT NO. N/A COUNTY NAME VOLUSIA

SECTION NO. 79110 ROAD DESIGNATION SR 400 (I-4) LIMITS/MILEPOST MP 0.000 - 10.227

PROJECT DESCRIPTION WIDENING SR 400 (I-4) FROM WEST OF CR 532 TO WEST OF SR 435 KIRKMAN ROAD AND FROM 1 MILE EAST OF SR 434 TO 1/2 MILE EAST OF SR 472.

PROPOSED STRUCTURE TYPICAL SECTION

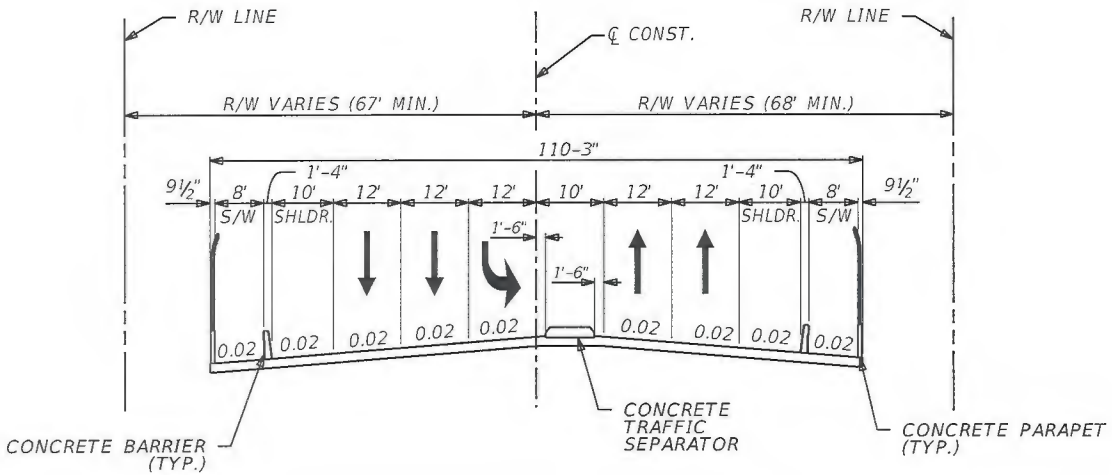

DESIGN SPEED = 40 MPH

RHODE ISLAND AVENUE BRIDGE SECTION

SHEET 4-30

APPROVED BY	FDOT CONCURRENCE	FHWA CONCURRENCE	COUNTY CONCURRENCE
ROBERT M. DENNEY, P.E. Engineer of Record 58593 Date 5/22/17	MARIO BIZZIO, P.E. FDOT District Design Engineer 6/1/17 Date	FHWA Transportation Engineer 7/25/17 Date	, P.E. County Engineer 6/1/17 Date
HNTB CORPORATION 610 CRESCENT EXEC. CT. SUITE 400 LAKE MARY, FL 32746 (407) 805-0355 CERT OF AUTH NO 6500			

ROBERT M. DENNEY LICENSE No. 58593 STATE OF FLORIDA PROFESSIONAL ENGINEER

amourad 5/22/2017 3:01:54 PM \\LKMw00\pmwork3\Jobs\59219 - I4 SAMR\TECHPROD\Typical Section Package\TYPDRD01-SEG-4.DGN

PROJECT IDENTIFICATION

FINANCIAL PROJECT ID 432100-1-22-01 FEDERAL AID PROJECT NO. N/A COUNTY NAME VOLUSIA

SECTION NO. 79110 ROAD DESIGNATION SR 400 (I-4) LIMITS/MILEPOST MP 0.000 - 10.227

PROJECT DESCRIPTION WIDENING SR 400 (I-4) FROM WEST OF CR 532 TO WEST OF SR 435 KIRKMAN ROAD AND FROM 1 MILE EAST OF SR 434 TO 1/2 MILE EAST OF SR 472.

PROPOSED ROADWAY TYPICAL SECTION

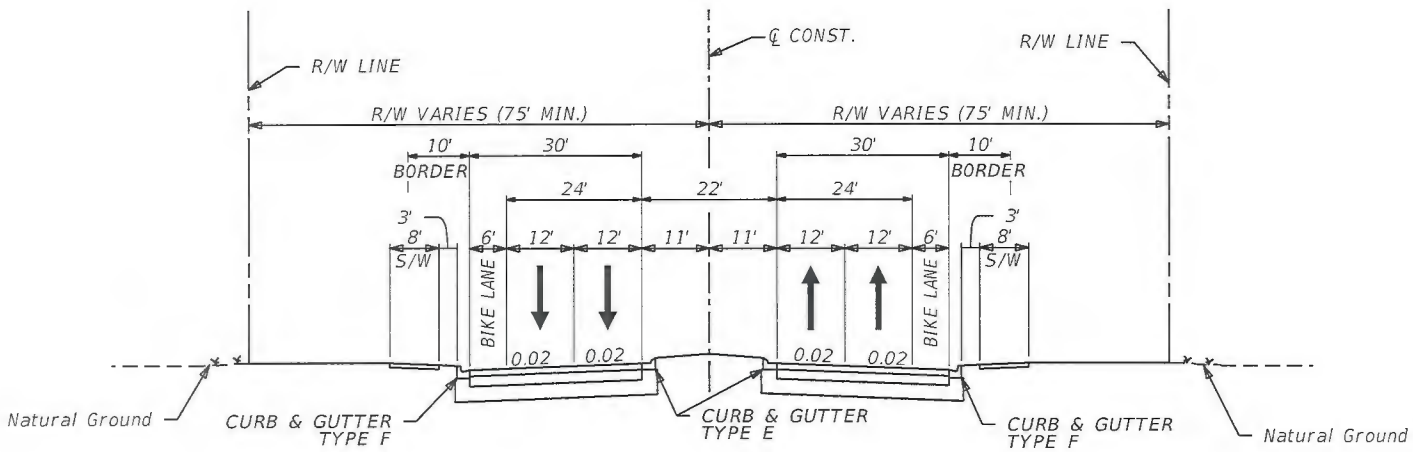

DESIGN SPEED = 40 MPH

RHODE ISLAND AVENUE ROADWAY SECTION

SHEET 4-31

APPROVED BY	FDOT CONCURRENCE	FHWA CONCURRENCE	COUNTY CONCURRENCE
ROBERT M. DENNEY, P.E. Date Engineer Of Record 58593	MARIO BIZZIO, P.E. FDOT District Design Engineer 6/1/17 Date	FHWA Transportation Engineer 7/25/17 Date	, P.E County Engineer 6/1/17 Date

HNTB CORPORATION
610 CRESCENT EXEC. CT.
SUITE 400
LAKE MARY, FL 32746
(407) 805-0355
CERT OF AUTH NO 6500

ROBERT M. DENNEY LICENSE No. 58593 STATE OF FLORIDA PROFESSIONAL ENGINEER

amourad 5/22/2017 3:01:54 PM \\LKMw00\pmwork3\Jobs\59219 - I4 SAMR\TECHPROD\Typical Section Package\TYPDRD01-SEG-4.DGN

PROJECT IDENTIFICATION

FINANCIAL PROJECT ID 432100-1-22-01 FEDERAL AID PROJECT NO. N/A COUNTY NAME VOLUSIA

SECTION NO. 79110 ROAD DESIGNATION SR 400 (I-4) LIMITS/MILEPOST MP 0.000 - 10.227

PROJECT DESCRIPTION WIDENING SR 400 (I-4) FROM WEST OF CR 532 TO WEST OF SR 435 KIRKMAN ROAD AND FROM 1 MILE EAST OF SR 434 TO 1/2 MILE EAST OF SR 472.

PROPOSED ROADWAY TYPICAL SECTION

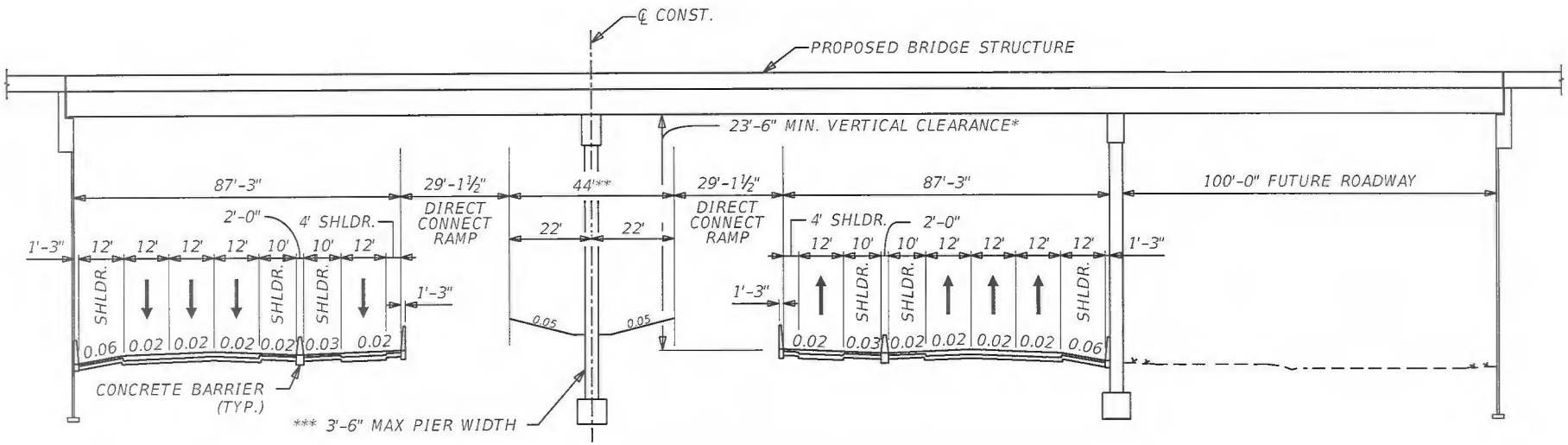

DESIGN SPEED = 70 MPH

SR 400 (I-4) UNDER RHODE ISLAND AVENUE

* VERTICAL CLEARANCE MEASURED FROM EXPRESS LANE INSIDE EDGE OF TRAVEL TO LOW MEMBER.

** 44' REQUIRED FOR FUTURE TRANSIT CORRIDOR. FUTURE TRANSIT CORRIDOR IS MEASURED FROM FACE OF FUTURE INSIDE BARRIER TO FACE OF FUTURE INSIDE BARRIER.

*** 3'-6" MAXIMUM PIER WIDTH ALLOWED.

SHEET 4-32

ROBERT M. DENNEY LICENSE No. 58593 STATE OF FLORIDA PROFESSIONAL ENGINEER

APPROVED BY

2/28/17 Date

Engineer of Record 58593

HNTB CORPORATION
610 CRESCENT EXEC. CT.
SUITE 400
LAKE MARY, FL 32746
(407) 805-0355
CERT OF AUTH NO 6500

A K Brennan 3/17/17 Date

FDOT District Design Engineer

FHWA CONCURRENCE

7/25/17 Date

FHWA Transportation Engineer

PROJECT IDENTIFICATION

FINANCIAL PROJECT ID 432100-1-22-01 FEDERAL AID PROJECT NO. N/A COUNTY NAME VOLUSIA

SECTION NO. 79110 ROAD DESIGNATION SR 400 (I-4) LIMITS/MILEPOST MP 0.000 - 10.227

PROJECT DESCRIPTION WIDENING SR 400 (I-4) FROM WEST OF CR 532 TO WEST OF SR 435 KIRKMAN ROAD AND FROM 1 MILE EAST OF SR 434 TO 1/2 MILE EAST OF SR 472.

PROPOSED ROADWAY TYPICAL SECTION

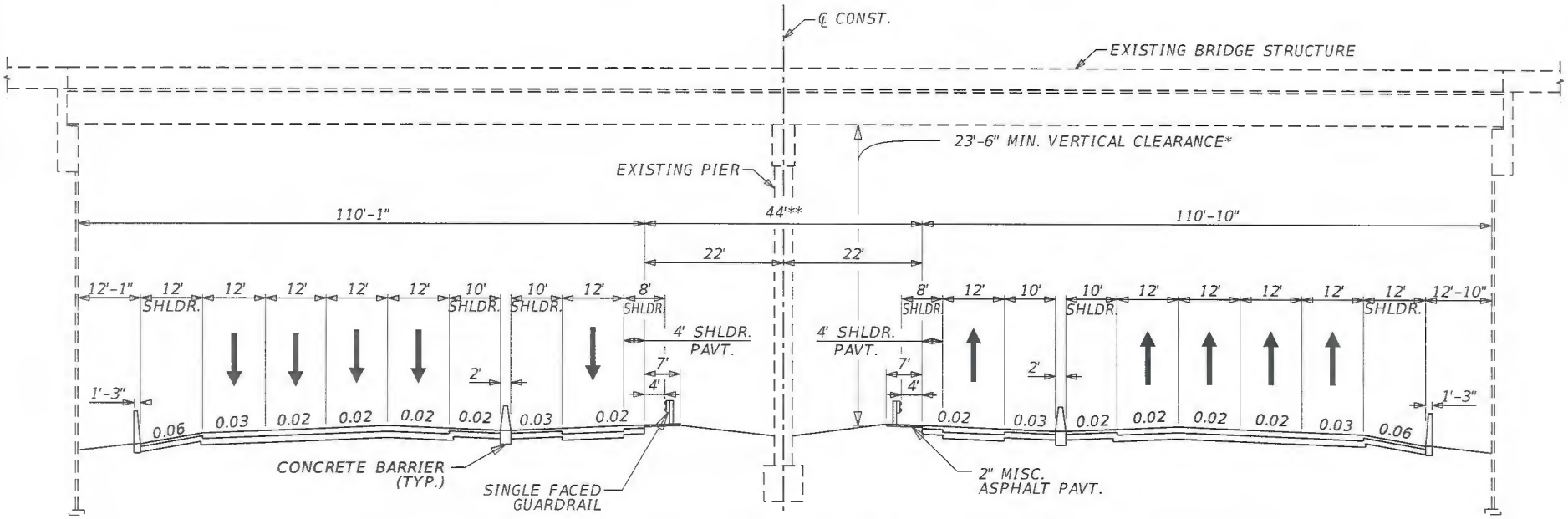

DESIGN SPEED = 70 MPH

SR 400 (I-4) UNDER GRAVES AVENUE

* VERTICAL CLEARANCE MEASURED FROM EXPRESS LANE INSIDE EDGE OF TRAVEL TO LOW MEMBER.

** 44' REQUIRED FOR FUTURE TRANSIT CORRIDOR. FUTURE TRANSIT CORRIDOR IS MEASURED FROM FACE OF FUTURE INSIDE BARRIER TO FACE OF FUTURE INSIDE BARRIER.

SHEET 4-33

ROBERT M. DENNEY LICENSE No. 58593 STATE OF FLORIDA PROFESSIONAL ENGINEER

APPROVED BY	FDOT CONCURRENCE	FHWA CONCURRENCE
ROBERT M. DENNEY, P.E. Engineer Of Record 58593 — Date 2/9/17	ANNETTE K. BRENNAN, P.E. FDOT District Design Engineer — Date 3/17/17	FHWA Transportation Engineer — Date 7/25/17

HNTB CORPORATION
610 CRESCENT EXEC. CT.
SUITE 400
LAKE MARY, FL 32746
(407) 805-0355
CERT OF AUTH NO 6500

mbacal 2/9/2017 2:40:15 PM \\LKMw00\pmwork3\Jobs\59219 - I4 SAMR\TECHPROD\Typical Section Package\TYPDRD01-SEG-4.DGN

PROJECT IDENTIFICATION

FINANCIAL PROJECT ID: 432100-1-22-01 COUNTY (SECTION): VOLUSIA (79110)

PROJECT DESCRIPTION: WIDENING SR 400 (I-4) FROM WEST OF CR 532 TO WEST OF SR 435 (KIRKMAN RD.) AND FROM 1 MILE EAST OF SR 434 TO 1/2 MILE EAST OF SR 472.

PROJECT CONTROLS (SR 472 WEST OF SR 400)

FUNCTIONAL CLASSIFICATION

( ) RURAL
(X) URBAN

( ) FREEWAY/EXPWY. ( ) MAJOR COLL.
(X) PRINCIPAL ART. ( ) MINOR COLL.
( ) MINOR ART. ( ) LOCAL

HIGHWAY SYSTEM

Yes	No	
(X)	( )	NATIONAL HIGHWAY SYSTEM
( )	(X)	FLORIDA INTRASTATE HIGHWAY SYSTEM
( )	(X)	STRATEGIC INTERMODAL SYSTEM
(X)	( )	STATE HIGHWAY SYSTEM
( )	(X)	OFF STATE HIGHWAY SYSTEM

ACCESS CLASSIFICATION

( ) 1 - FREEWAY
( ) 2 - RESTRICTIVE w/Service Roads
(X) 3 - RESTRICTIVE w/660 ft. Connection Spacing
( ) 4 - NON-RESTRICTIVE w/2640 ft. Signal Spacing
( ) 5 - RESTRICTIVE w/440 ft. Connection Spacing
( ) 6 - NON-RESTRICTIVE w/1320 ft. Signal Spacing
( ) 7 - BOTH MEDIAN TYPES

TRAFFIC

	YEAR	AADT
OPENING	2020	40,000
INTERIM	2030	50,000
DESIGN	2040	59,000

DESIGN SPEED 55 MPH
POSTED SPEED 55 MPH

DISTRIBUTION

K	9.0
D	62.50
T_{24}	6.4%

CRITERIA

(X) NEW CONSTRUCTION / RECONSTRUCTION
( ) RRR INTERSTATE / FREEWAY
( ) RRR NON-INTERSTATE / FREEWAY
( ) TDLC / NEW CONSTRUCTION / RECONSTRUCTION
( ) TDLC / RRR
( ) MANUAL OF UNIFORM MINIMUM STANDARDS (FLORIDA GREENBOOK) (OFF-STATE HIGHWAY SYSTEM ONLY)

DESIGN SPEED APPROVALS

AK Brennan — 3/17/17
DISTRICT DESIGN ENGINEER — DATE

Jamal Hatfield — 4/10/17
DISTRICT TRAFFIC OPERATIONS ENGINEER — DATE

LIST ANY POTENTIAL EXCEPTIONS AND VARIATIONS RELATED TO TYPICAL SECTION ELEMENTS:

N/A

LIST MAJOR STRUCTURES LOCATION/DESCRIPTION - REQUIRING INDEPENDENT STRUCTURE DESIGN:

SR 472 (790053, 790190)

LIST MAJOR UTILITIES WITHIN PROJECT CORRIDOR:

GAS (CENTRAL FLORIDA GAS)
WATER (VOLUSIA COUNTY UTILITIES)
COMMUNICATIONS (BRIGHTHOUSE NETWORKS, COMCAST, LEVEL 3, VERIZON)
WASTEWATER (VOLUSIA COUNTY UTILITIES)
ELECTRIC (DUKE ENERGY DISTRIBUTION, DUKE ENERGY TRANSMISSION)

LIST OTHER INFORMATION PERTINENT TO DESIGN OF PROJECT:

N/A

PROJECT IDENTIFICATION

FINANCIAL PROJECT ID: 432100-1-22-01 COUNTY (SECTION): VOLUSIA (79110)

PROJECT DESCRIPTION: WIDENING SR 400 (I-4) FROM WEST OF CR 532 TO WEST OF SR 435 (KIRKMAN RD.) AND FROM 1 MILE EAST OF SR 434 TO 1/2 MILE EAST OF SR 472.

PROJECT CONTROLS (SR 472 EAST OF SR 400)

FUNCTIONAL CLASSIFICATION

( ) RURAL
(X) URBAN

( ) FREEWAY/EXPWY. ( ) MAJOR COLL.
(X) PRINCIPAL ART. ( ) MINOR COLL.
( ) MINOR ART. ( ) LOCAL

HIGHWAY SYSTEM

Yes	No	
(X)	( )	NATIONAL HIGHWAY SYSTEM
( )	(X)	FLORIDA INTRASTATE HIGHWAY SYSTEM
( )	(X)	STRATEGIC INTERMODAL SYSTEM
(X)	( )	STATE HIGHWAY SYSTEM
( )	(X)	OFF STATE HIGHWAY SYSTEM

ACCESS CLASSIFICATION

( ) 1 - FREEWAY
( ) 2 - RESTRICTIVE w/Service Roads
(X) 3 - RESTRICTIVE w/660 ft. Connection Spacing
( ) 4 - NON-RESTRICTIVE w/2640 ft. Signal Spacing
( ) 5 - RESTRICTIVE w/440 ft. Connection Spacing
( ) 6 - NON-RESTRICTIVE w/1320 ft. Signal Spacing
( ) 7 - BOTH MEDIAN TYPES

TRAFFIC

	YEAR	AADT
OPENING	2020	40,000
INTERIM	2030	50,000
DESIGN	2040	59,000

DESIGN SPEED 45 MPH
POSTED SPEED 45 MPH

DISTRIBUTION

K	9.0
D	62.50
T_{24}	6.4%

CRITERIA

(X) NEW CONSTRUCTION / RECONSTRUCTION
( ) RRR INTERSTATE / FREEWAY
( ) RRR NON-INTERSTATE / FREEWAY
( ) TDLC / NEW CONSTRUCTION / RECONSTRUCTION
( ) TDLC / RRR
( ) MANUAL OF UNIFORM MINIMUM STANDARDS (FLORIDA GREENBOOK) (OFF-STATE HIGHWAY SYSTEM ONLY)

DESIGN SPEED APPROVALS

AK Brennan — 3/17/17
DISTRICT DESIGN ENGINEER — DATE

4/10/17
DISTRICT TRAFFIC OPERATIONS ENGINEER — DATE

LIST ANY POTENTIAL EXCEPTIONS AND VARIATIONS RELATED TO TYPICAL SECTION ELEMENTS:

N/A

LIST MAJOR STRUCTURES LOCATION/DESCRIPTION - REQUIRING INDEPENDENT STRUCTURE DESIGN:

SR 472 (790053, 790190)

LIST MAJOR UTILITIES WITHIN PROJECT CORRIDOR:

GAS (CENTRAL FLORIDA GAS)
WATER (VOLUSIA COUNTY UTILITIES)
COMMUNICATIONS (BRIGHTHOUSE NETWORKS, COMCAST, LEVEL 3, VERIZON)
WASTEWATER (VOLUSIA COUNTY UTILITIES)
ELECTRIC (DUKE ENERGY DISTRIBUTION, DUKE ENERGY TRANSMISSION)

LIST OTHER INFORMATION PERTINENT TO DESIGN OF PROJECT:

N/A

PROJECT IDENTIFICATION

FINANCIAL PROJECT ID: 432100-1-22-01 COUNTY (SECTION): VOLUSIA (79110)

PROJECT DESCRIPTION: WIDENING SR 400 (I-4) FROM WEST OF CR 532 TO WEST OF SR 435 (KIRKMAN RD.) AND FROM 1 MILE EAST OF SR 434 TO 1/2 MILE EAST OF SR 472.

PROJECT CONTROLS (HOWLAND BOULEVARD)

FUNCTIONAL CLASSIFICATION

( ) RURAL
(X) URBAN

( ) FREEWAY/EXPWY. ( ) MAJOR COLL.
( ) PRINCIPAL ART. ( ) MINOR COLL.
(X) MINOR ART. ( ) LOCAL

HIGHWAY SYSTEM

Yes	No	
(X)	( )	NATIONAL HIGHWAY SYSTEM
( )	(X)	FLORIDA INTRASTATE HIGHWAY SYSTEM
( )	(X)	STRATEGIC INTERMODAL SYSTEM
( )	(X)	STATE HIGHWAY SYSTEM
(X)	( )	OFF STATE HIGHWAY SYSTEM

ACCESS CLASSIFICATION

( ) 1 - FREEWAY
( ) 2 - RESTRICTIVE w/Service Roads
( ) 3 - RESTRICTIVE w/660 ft. Connection Spacing
( ) 4 - NON-RESTRICTIVE w/2640 ft. Signal Spacing
(X) 5 - RESTRICTIVE w/440 ft. Connection Spacing
( ) 6 - NON-RESTRICTIVE w/1320 ft. Signal Spacing
( ) 7 - BOTH MEDIAN TYPES

TRAFFIC

	YEAR	AADT
OPENING	2020	40,000
INTERIM	2030	50,000
DESIGN	2040	59,000

DESIGN SPEED 45 MPH
POSTED SPEED 45 MPH

DISTRIBUTION

K	10.34
D	62.50
T_{24}	6.4%

CRITERIA

(X) NEW CONSTRUCTION / RECONSTRUCTION
( ) RRR INTERSTATE / FREEWAY
( ) RRR NON-INTERSTATE / FREEWAY
( ) TDLC / NEW CONSTRUCTION / RECONSTRUCTION
( ) TDLC / RRR
( ) MANUAL OF UNIFORM MINIMUM STANDARDS (FLORIDA GREENBOOK) (OFF-STATE HIGHWAY SYSTEM ONLY)

DESIGN SPEED APPROVALS

AK Brennan — 3/17/17
DISTRICT DESIGN ENGINEER — DATE

[illegible] — 4/10/17
DISTRICT TRAFFIC OPERATIONS ENGINEER — DATE

LIST ANY POTENTIAL EXCEPTIONS AND VARIATIONS RELATED TO TYPICAL SECTION ELEMENTS:

N/A

LIST MAJOR STRUCTURES LOCATION/DESCRIPTION - REQUIRING INDEPENDENT STRUCTURE DESIGN:

SR 472 (790053, 790190)

LIST MAJOR UTILITIES WITHIN PROJECT CORRIDOR:
GAS (CENTRAL FLORIDA GAS)
WATER (VOLUSIA COUNTY UTILITIES)
COMMUNICATIONS (BRIGHTHOUSE NETWORKS, COMCAST, LEVEL 3, VERIZON)
WASTEWATER (VOLUSIA COUNTY UTILITIES)
ELECTRIC (DUKE ENERGY DISTRIBUTION, DUKE ENERGY TRANSMISSION)

LIST OTHER INFORMATION PERTINENT TO DESIGN OF PROJECT:

N/A

PROJECT IDENTIFICATION

FINANCIAL PROJECT ID 432100-1-22-01 FEDERAL AID PROJECT NO. N/A COUNTY NAME VOLUSIA

SECTION NO. 79110 ROAD DESIGNATION SR 400 (I-4) LIMITS/MILEPOST MP 0.000 - 10.227

PROJECT DESCRIPTION WIDENING SR 400 (I-4) FROM WEST OF CR 532 TO WEST OF SR 435 KIRKMAN ROAD AND FROM 1 MILE EAST OF SR 434 TO 1/2 MILE EAST OF SR 472.

PROPOSED STRUCTURE TYPICAL SECTION

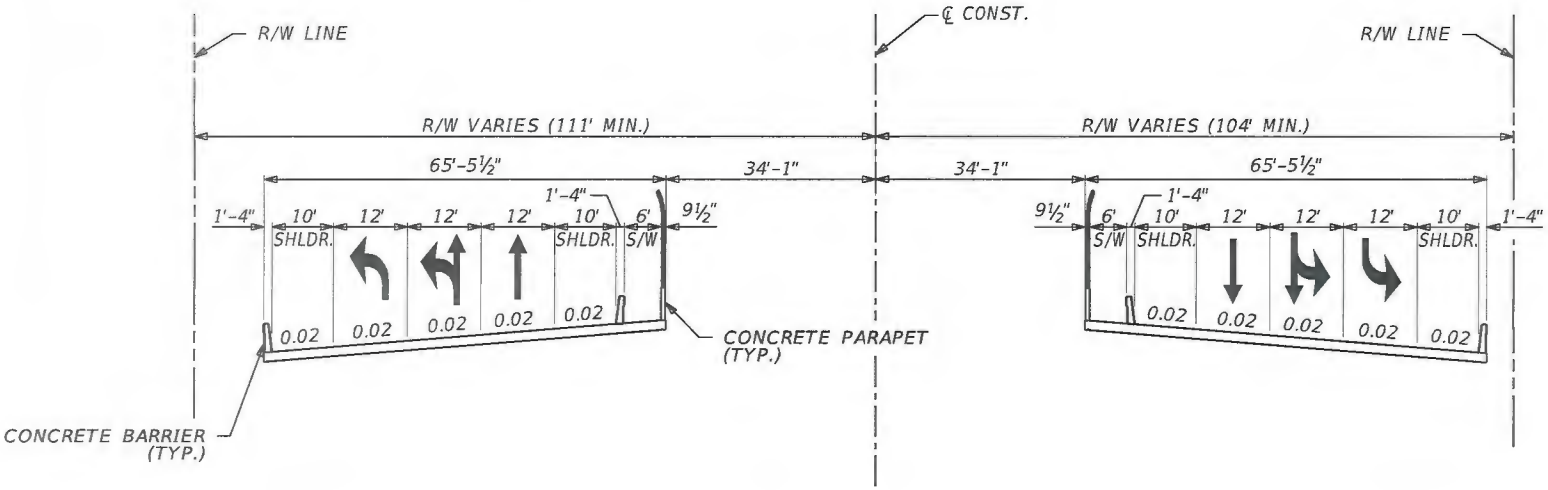

SR 472 BRIDGE SECTION
DIVERGING DIAMOND INTERCHANGE

SHEET 4-37

APPROVED BY	FDOT CONCURRENCE	FHWA CONCURRENCE
ROBERT M. DENNEY, P.E. Date Engineer Of Record 58593	ANNETTE K. BRENNAN, P.E. FDOT District Design Engineer Date 3/17/17	FHWA Transportation Engineer Date 7/25/17

HNTB CORPORATION
610 CRESCENT EXEC. CT.
SUITE 400
LAKE MARY, FL 32746
(407) 805-0355
CERT OF AUTH NO 6500

ROBERT M. DENNEY LICENSE No. 58593 STATE OF FLORIDA PROFESSIONAL ENGINEER

mbacal 2/7/2017 7:02:11 PM \\LKMw00\pmwork3\Jobs\59219 - I4 SAMR\TECHPROD\Typical Section Package\TYPDRD01-SEG-4.DGN

PROJECT IDENTIFICATION

FINANCIAL PROJECT ID 432100-1-22-01 FEDERAL AID PROJECT NO. N/A COUNTY NAME VOLUSIA

SECTION NO. 79110 ROAD DESIGNATION SR 400 (I-4) LIMITS/MILEPOST MP 0.000 - 10.227

PROJECT DESCRIPTION WIDENING SR 400 (I-4) FROM WEST OF CR 532 TO WEST OF SR 435 KIRKMAN ROAD AND FROM 1 MILE EAST OF SR 434 TO 1/2 MILE EAST OF SR 472.

PROPOSED ROADWAY TYPICAL SECTION

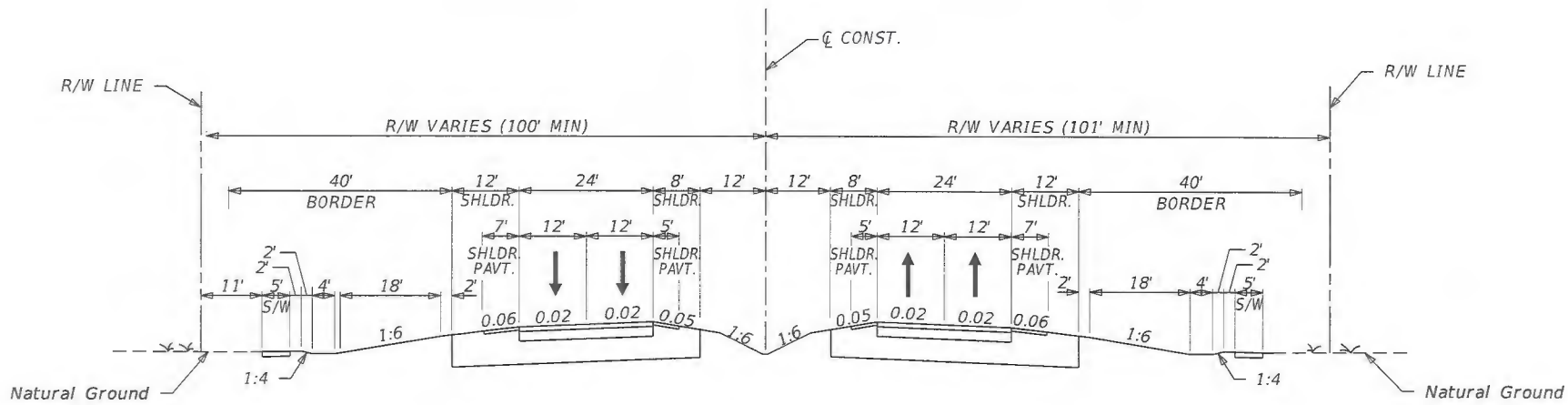

DESIGN SPEED = 55 MPH

SR 472 ROADWAY SECTION (WEST OF SR 400)

SHEET 4-38

APPROVED BY	FDOT CONCURRENCE	FHWA CONCURRENCE
ROBERT M. DENNEY, P.E. Date Engineer Of Record 58593 HNTB CORPORATION 610 CRESCENT EXEC. CT. SUITE 400 LAKE MARY, FL 32746 (407) 805-0355 CERT OF AUTH NO 6500	ANNETTE K. BRENNAN, P.E. FDOT District Design Engineer Date 3/17/17	FHWA Transportation Engineer Date 7/25/17

ROBERT M. DENNEY LICENSE No. 58593 STATE OF FLORIDA PROFESSIONAL ENGINEER 2/9/17

PROJECT IDENTIFICATION

FINANCIAL PROJECT ID 432100-1-22-01 FEDERAL AID PROJECT NO. N/A COUNTY NAME VOLUSIA

SECTION NO. 79110 ROAD DESIGNATION SR 400 (I-4) LIMITS/MILEPOST MP 0.000 - 10.227

PROJECT DESCRIPTION WIDENING SR 400 (I-4) FROM WEST OF CR 532 TO WEST OF SR 435 KIRKMAN ROAD AND FROM 1 MILE EAST OF SR 434 TO 1/2 MILE EAST OF SR 472.

PROPOSED ROADWAY TYPICAL SECTION

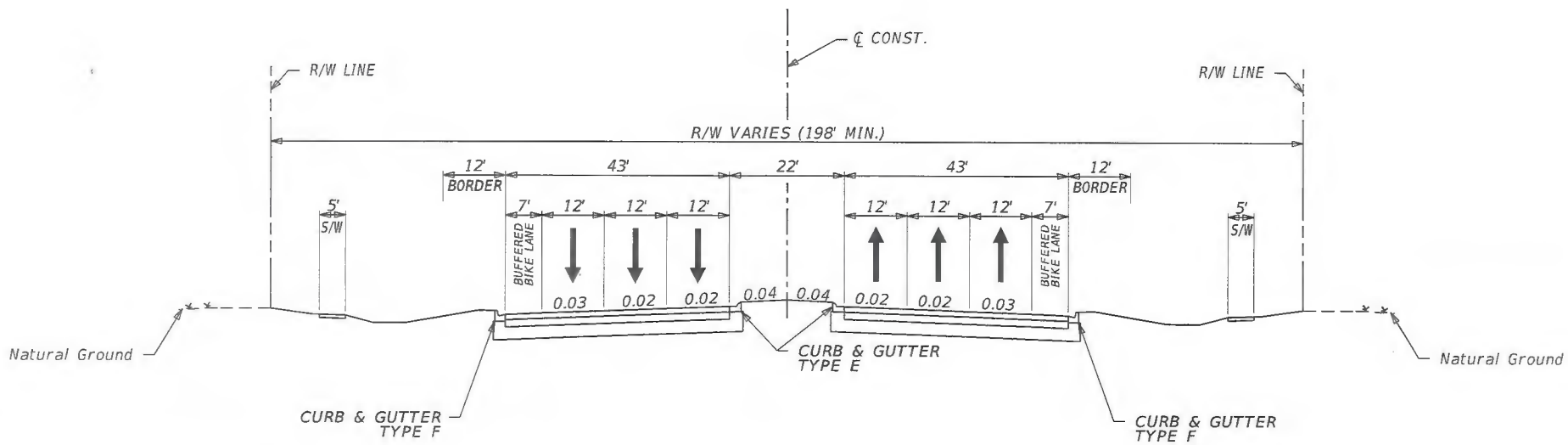

DESIGN SPEED = 45 MPH

SR 472 ROADWAY SECTION (EAST OF SR 400)

SHEET 4-39

APPROVED BY	FDOT CONCURRENCE	FHWA CONCURRENCE
ROBERT M. DENNEY, P.E. Date Engineer of Record 58593 HNTB CORPORATION 610 CRESCENT EXEC. CT. SUITE 400 LAKE MARY, FL 32746 (407) 805-0355	ANNETTE K. BRENNAN, P.E. FDOT District Design Engineer Date 3/17/17	FHWA Transportation Engineer Date 7/25/17

ROBERT M. DENNEY LICENSE No. 58593 STATE OF FLORIDA PROFESSIONAL ENGINEER

mbacal 2/9/2017 2:40:18 PM \\LKMw00\pmwork3\Jobs\59219 - I4 SAMR\TECHPROD\Typical Section Package\TYPDRD01-SEG-4.DGN

PROJECT IDENTIFICATION

FINANCIAL PROJECT ID 432100-1-22-01 FEDERAL AID PROJECT NO. N/A COUNTY NAME VOLUSIA

SECTION NO. 79110 ROAD DESIGNATION SR 400 (I-4) LIMITS/MILEPOST MP 0.000 - 10.227

PROJECT DESCRIPTION WIDENING SR 400 (I-4) FROM WEST OF CR 532 TO WEST OF SR 435 KIRKMAN ROAD AND FROM 1 MILE EAST OF SR 434 TO 1/2 MILE EAST OF SR 472.

PROPOSED ROADWAY TYPICAL SECTION

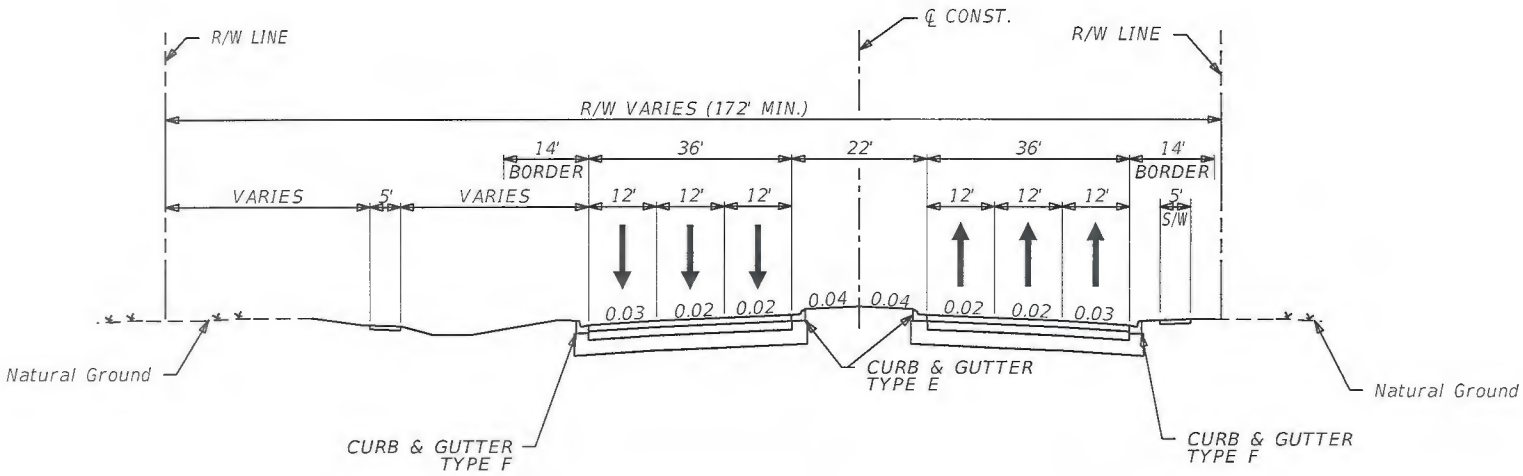

DESIGN SPEED = 45 MPH

HOWLAND BOULEVARD ROADWAY SECTION (EAST OF GRAVES AVENUE)

SHEET 4-40

APPROVED BY	FDOT CONCURRENCE	FHWA CONCURRENCE	COUNTY CONCURRENCE
ROBERT M. DENNEY, P.E. Engineer of Record 58593 Date 5/18/17	MARIO BIZZIO, P.E. FDOT District Design Engineer 6/1/17 Date	FHWA Transportation Engineer 7/25/17 Date	, P.E. County Engineer 6/1/17 Date

HNTB CORPORATION
610 CRESCENT EXEC. CT.
SUITE 400
LAKE MARY, FL 32746
(407) 805-0355
CERT OF AUTH NO 6500

ROBERT M. DENNEY LICENSE No. 58593 STATE OF FLORIDA PROFESSIONAL ENGINEER

amourad 5/18/2017 2:40:35 PM \\LKMw00\pmwork3\Jobs\59219 - 14 SAMR\TECHPROD\Typical Section Package\TYPDRD01-SEG-4.DGN

PROJECT IDENTIFICATION

FINANCIAL PROJECT ID 432100-1-22-01 FEDERAL AID PROJECT NO. N/A COUNTY NAME VOLUSIA

SECTION NO. 79110 ROAD DESIGNATION SR 400 (I-4) LIMITS/MILEPOST MP 0.000 - 10.227

PROJECT DESCRIPTION WIDENING SR 400 (I-4) FROM WEST OF CR 532 TO WEST OF SR 435 KIRKMAN ROAD AND FROM 1 MILE EAST OF SR 434 TO 1/2 MILE EAST OF SR 472.

PROPOSED ROADWAY TYPICAL SECTION

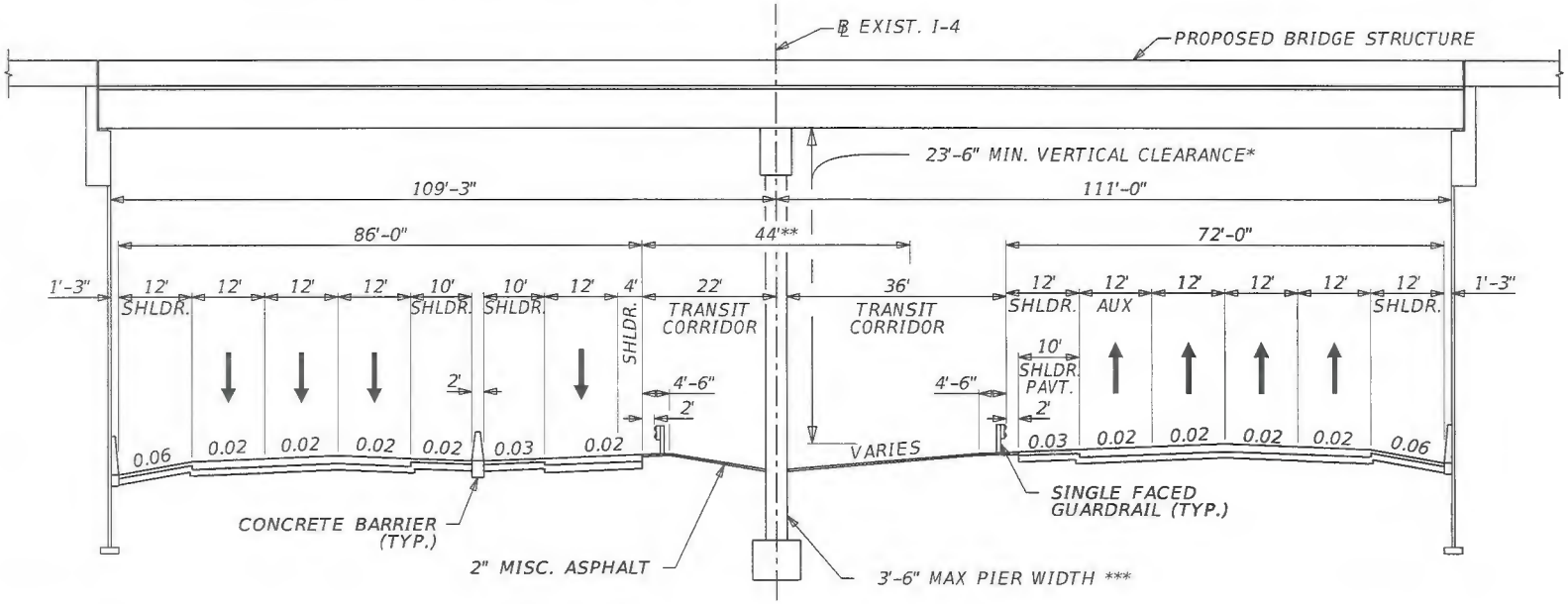

DESIGN SPEED = 70 MPH

SR 400 (I-4) UNDER SR 472 EB & WB

* VERTICAL CLEARANCE MEASURED FROM EXPRESS LANE INSIDE EDGE OF TRAVEL TO LOW MEMBER.

** 44' REQUIRED FOR FUTURE TRANSIT CORRIDOR. FUTURE TRANSIT CORRIDOR IS MEASURED FROM FACE OF FUTURE INSIDE BARRIER TO FACE OF FUTURE INSIDE BARRIER.

*** 3'-6" MAXIMUM PIER WIDTH ALLOWED.

SHEET 4-41

APPROVED BY	FDOT CONCURRENCE	FHWA CONCURRENCE
ROBERT M. DENNEY, P.E. Date Engineer Of Record 58593 HNTB CORPORATION 610 CRESCENT EXEC. CT. SUITE 400 LAKE MARY, FL 32746 (407) 805-0355 CERT OF AUTH NO 6500	ANNETTE K. BRENNAN, P.E. FDOT District Design Engineer Date 3/17/17	FHWA Transportation Engineer Date 7/25/17

ROBERT M. DENNEY LICENSE No. 58593 STATE OF FLORIDA PROFESSIONAL ENGINEER